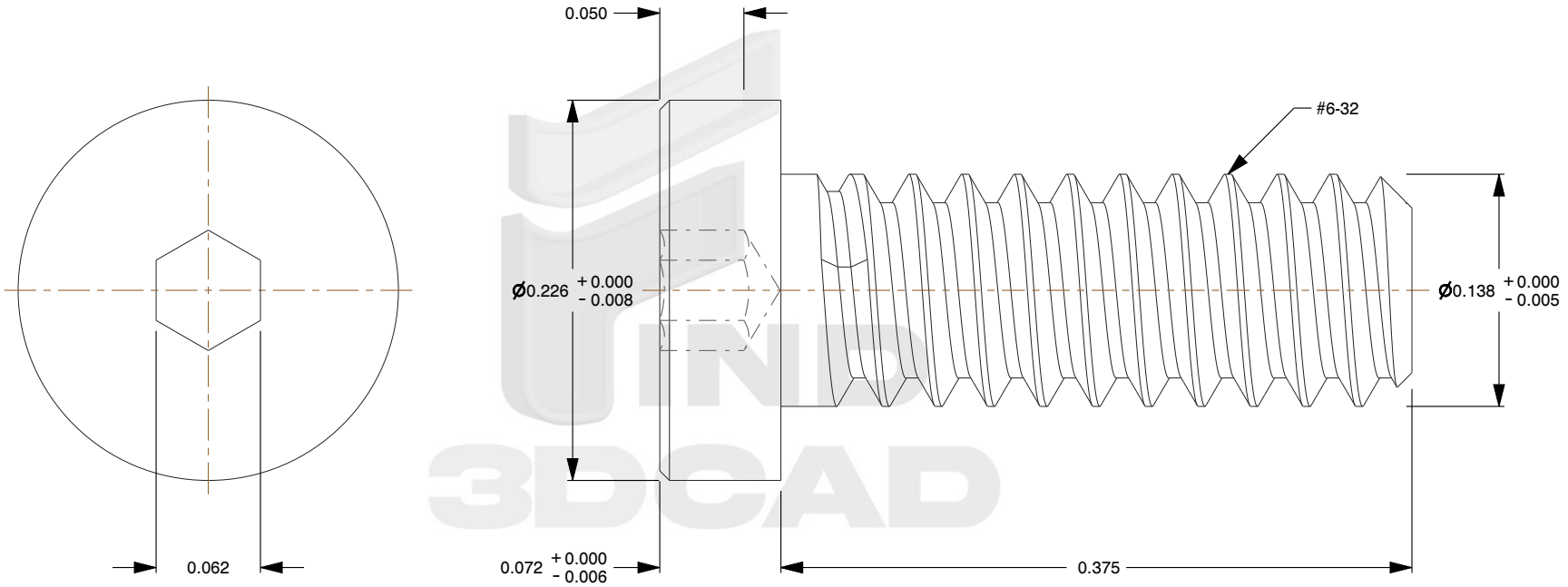

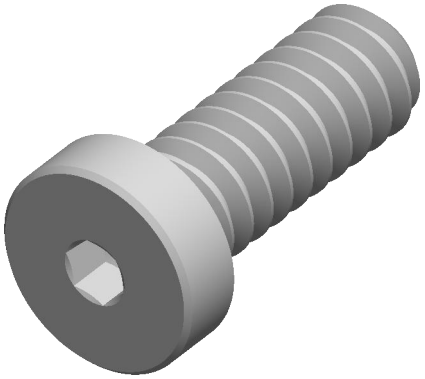

Notes:

1. **Category:** Socket Head Cap Screws
2. **System of Measurement:** Inch
3. **Head Style:** Low Cylindrical Head
4. **Drive Style:** Hex Socket Drive
5. **Thread Direction:** Right-Hand Thread
6. **Standards and Specifications:** ASME B18.3.1

find3dcad

THIRD ANGLE PROJECTION

This file and the related information are provided for reference only and may change without notice. find3dcad does not guarantee the accuracy, completeness, or suitability of this file or the information provided. You are responsible for how you use this file and its information.

This document is the property of find3dcad. The information in it may not be copied, shared, or given to any third party without written permission from find3dcad.

DESCRIPTION

#6-32 X 3/8" Low Head
Hex Socket Cap Screws,
Stainless Steel

TITLE

Cap Screws

Sheet Size	PART NUMBER	Rev.	ISSUED
A	305-632X38	01	2026-10-19

SCALE: 9.658

Unless otherwise specified Dimensions are in INCHES