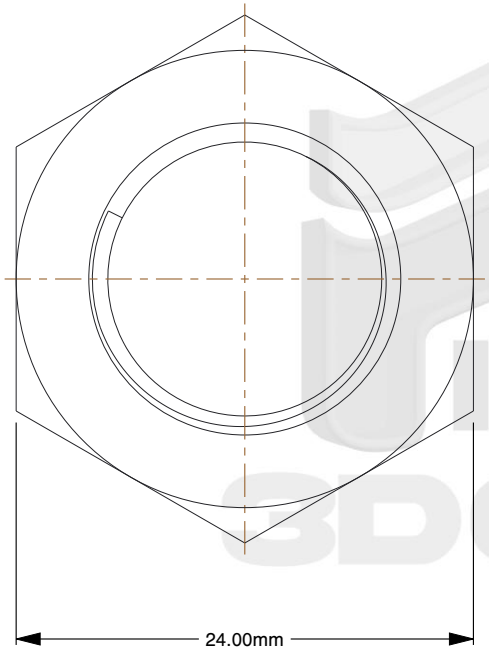

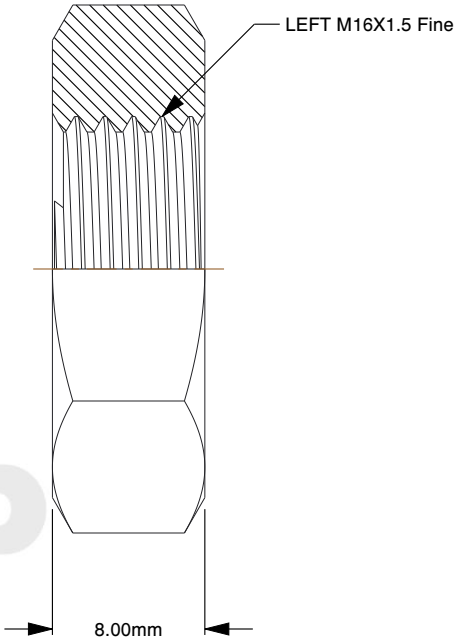

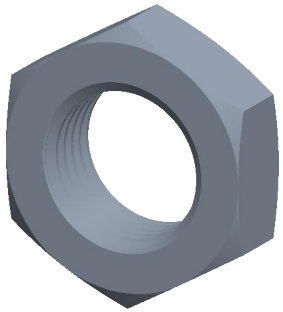

Notes:

1. **Thread Diameter + Pitch:** LEFT M16X1.5 Fine
2. **Thread Direction:** Left Hand / Reverse
3. **Type:** Left Handed Nut
4. **Material:** 14H Carbon Steel
5. **Finish:** Plain
6. **Drive:** 24mm Wrench
7. **Height:** 8mm
8. **Profile:** Thin
9. **Measurement System:** Metric
10. **Specification:** DIN 439-LH

find3dcad

THIRD ANGLE PROJECTION

This file and the related information are provided for reference only and may change without notice. find3dcad does not guarantee the accuracy, completeness, or suitability of this file or the information provided. You are responsible for how you use this file and its information.

This document is the property of find3dcad. The information in it may not be copied, shared, or given to any third party without written permission from find3dcad.

TITLE	DESCRIPTION
Hex Nut	Left Hand Jam Thin Nut FINE Steel, Class Varies DIN 439/936 LH

Sheet Size	PART NUMBER	Rev.	ISSUED
A	MDLHCJTN16X1-5JAMPLN	01	2026-10-20

SCALE: 2.520	Unless otherwise specified Dimensions are in MILLIMETERS