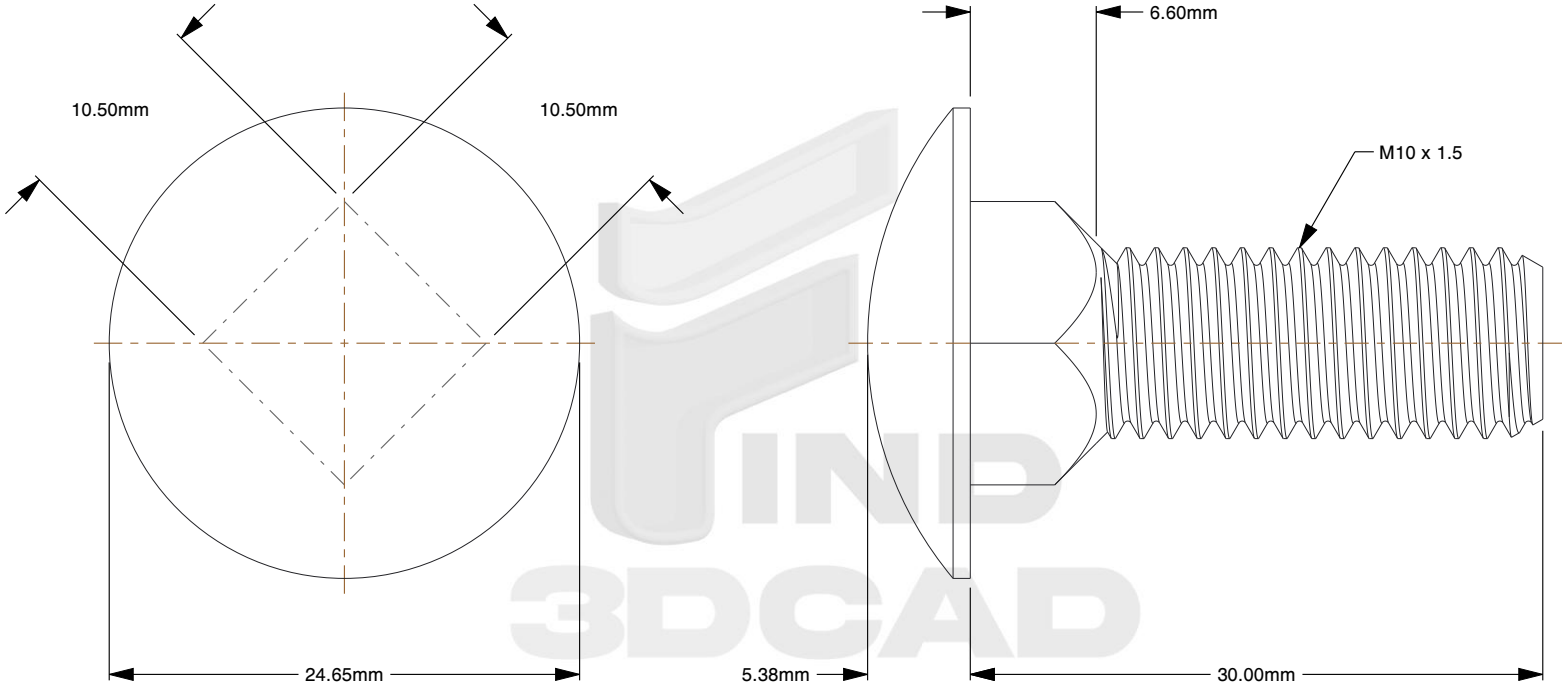

Notes:

1. **Specification:** DIN 603
2. **Thread Diameter + Pitch:** M10X1.5
3. **Length:** 30mm
4. **Thread Amount:** Full Thread
5. **Material:** A2-70 Stainless Steel
6. **Finish:** Plain
7. **Collar Height:** 6.6mm
8. **Collar Diameter:** 10.5mm
9. **Head Diameter:** 24.65mm
10. **Head Height:** 5.38mm
11. **Type Screw/Bolt:** Carriage Bolt/Screw
12. **Thread Direction:** Right Hand
13. **Measurement System:** Metric
14. **Sulfur (S):** less than or equal to 0.03%

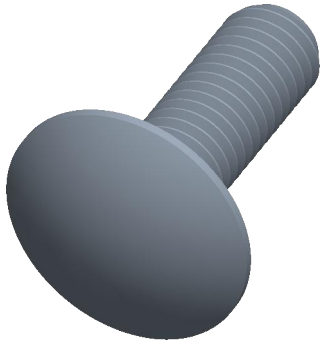

find3dcad

THIRD ANGLE PROJECTION

This file and the related information are provided for reference only and may change without notice. TOREC Screws does not guarantee the accuracy, completeness, or suitability of this file or the information provided. You are responsible for how you use this file and its information.

This document is the property of TOREC Screws. The information in it may not be copied, shared, or given to any third party without written permission from TOREC Screws.

DESCRIPTION

M10X1.5 Carriage Bolt
A2-70 Stainless
DIN 603

TITLE

Carriage Bolts

Sheet Size	PART NUMBER	Rev.	ISSUED
A	MDCB210X30SS	01	2026-10-20

SCALE: 2.525

Unless otherwise specified Dimensions are in MILLIMETERS