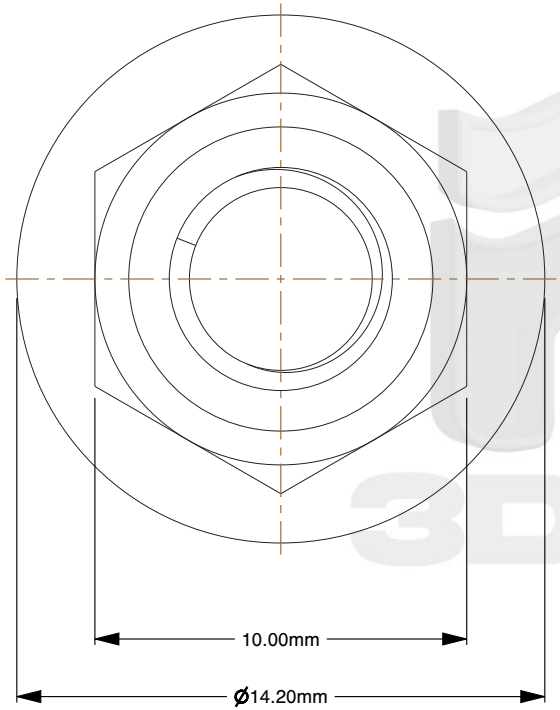

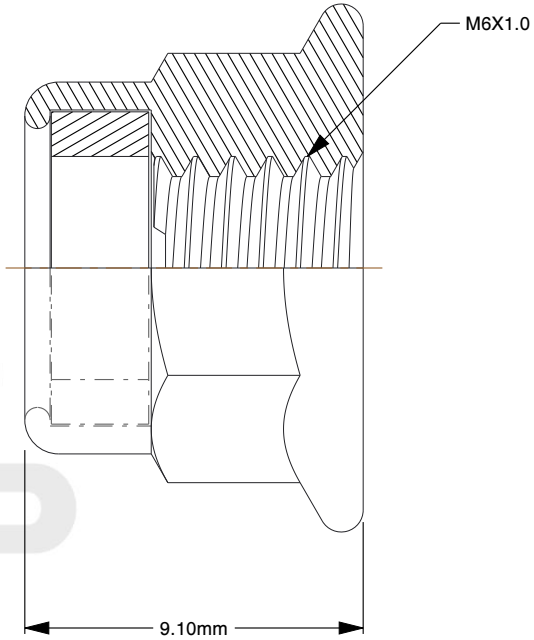

Notes:

1. **Thread Diameter + Pitch:** M6X1.0
2. **Thread Direction:** Right Hand
3. **Type:** Nylon Flange Nut
4. **Material:** Class 10 Steel
5. **Finish:** Zinc Plated
6. **Drive:** 10mm Wrench
7. **Height:** 9.1mm
8. **Flange Width:** 14.2mm
9. **Flange Type:** Smooth
10. **Measurement System:** Metric
11. **Specification:** DIN 6926

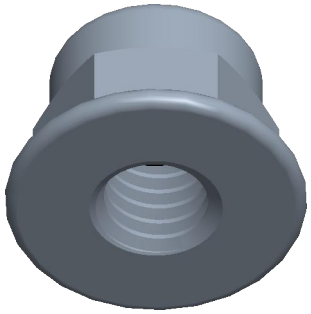

find3dcad

THIRD ANGLE PROJECTION

This file and the related information are provided for reference only and may change without notice. find3dcad does not guarantee the accuracy, completeness, or suitability of this file or the information provided. You are responsible for how you use this file and its information.

This document is the property of find3dcad. The information in it may not be copied, shared, or given to any third party without written permission from find3dcad.

TITLE	DESCRIPTION
Nylon Flange Nut	Coarse DIN 6926 Nylon Flange Steel Class 10 Zinc Plated Smooth Bottom Nut

Sheet Size	PART NUMBER	Rev.	ISSUED
A	MDSNFN6CLZ	01	2026-10-19

SCALE: 4.919	Unless otherwise specified Dimensions are in MILLIMETERS