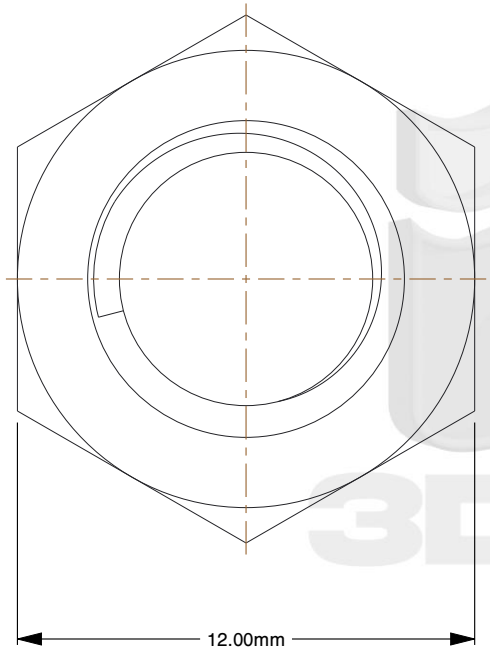

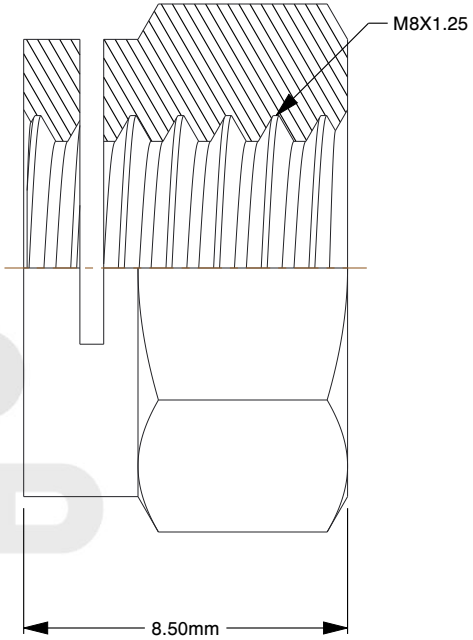

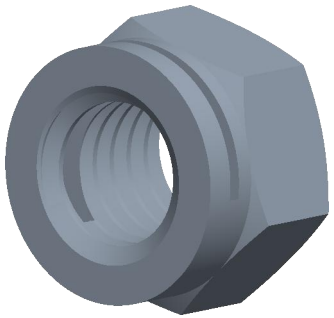

Notes:

1. **Thread Diameter + Pitch:** M8X1.25
2. **Thread Direction:** Right Hand
3. **Type:** Slit Lock Nut
4. **Material:** Class 8 Steel
5. **Finish:** Copper
6. **Drive:** 12mm Wrench
7. **Height:** 8.5mm
8. **Measurement System:** Metric
9. **Specification:** DIN 14441

find3dcad

THIRD ANGLE PROJECTION

This file and the related information are provided for reference only and may change without notice. find3dcad does not guarantee the accuracy, completeness, or suitability of this file or the information provided. You are responsible for how you use this file and its information.

This document is the property of find3dcad. The information in it may not be copied, shared, or given to any third party without written permission from find3dcad.

TITLE	DESCRIPTION
Slit Locking Hex Nut	Slit Locking Hex Nut Steel Class 8 Copper Exhaust DIN 14441

Sheet Size	PART NUMBER	Rev.	ISSUED
A	MDSLHN8X12	01	2026-10-16

SCALE: 5.041	Unless otherwise specified Dimensions are in MILLIMETERS