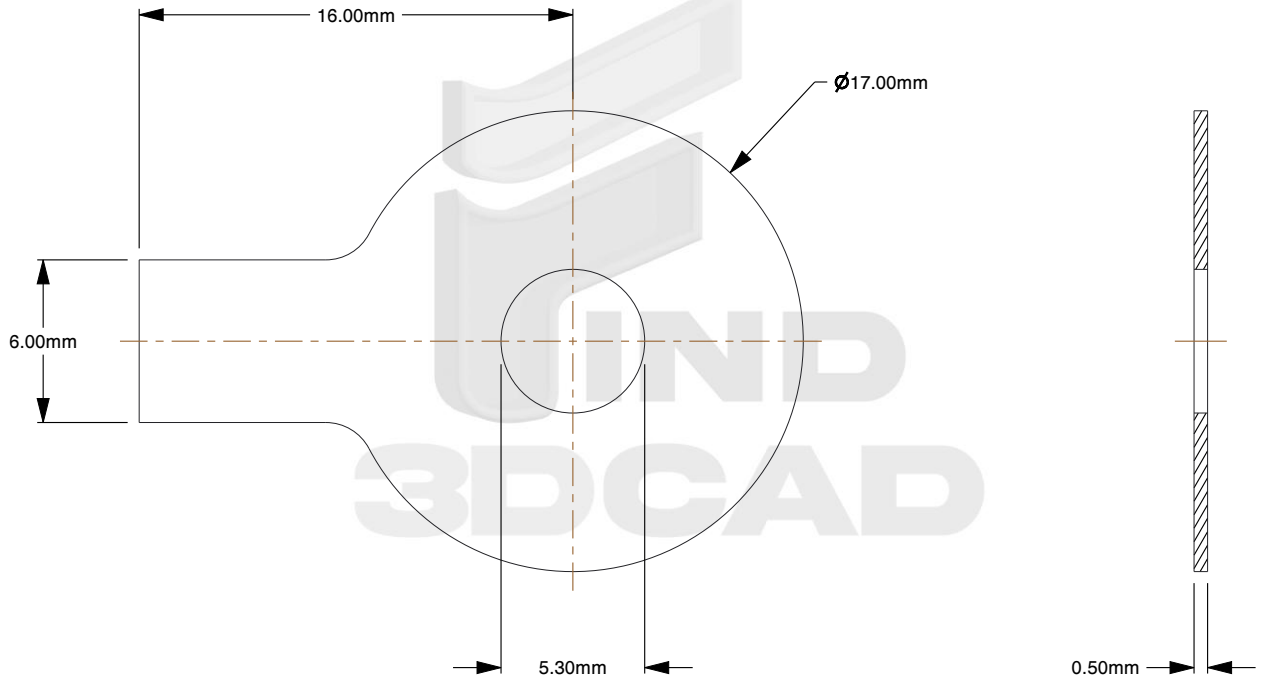

Notes:

1. **For Screw/Bolt Size:** M5
2. **Type:** Tab Washer
3. **Form:** Single Tab
4. **Material:** A2 Stainless Steel
5. **Finish:** Plain
6. **Thickness:** 0.5mm
7. **Inner Diameter:** 5.3mm
8. **Outer Diameter:** 17mm
9. **Measurement System:** Metric
10. **Tab Width:** 6mm
11. **Center of Hole to Edge:** 16mm
12. **Specification:** DIN 93

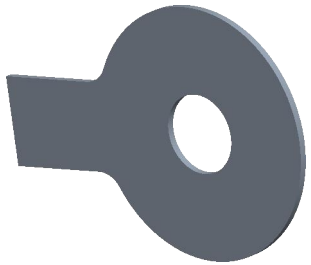

find3dcad

THIRD ANGLE PROJECTION

This file and the related information are provided for reference only and may change without notice. find3dcad does not guarantee the accuracy, completeness, or suitability of this file or the information provided. You are responsible for how you use this file and its information.

This document is the property of find3dcad. The information in it may not be copied, shared, or given to any third party without written permission from find3dcad.

TITLE	DESCRIPTION
Tab Washer	Washer + Tab A2 Stainless Steel DIN 93

Sheet Size	PART NUMBER	Rev.	ISSUED
A	MDSTW5SS	01	2026-10-19

SCALE: 3.586	Unless otherwise specified Dimensions are in MILLIMETERS