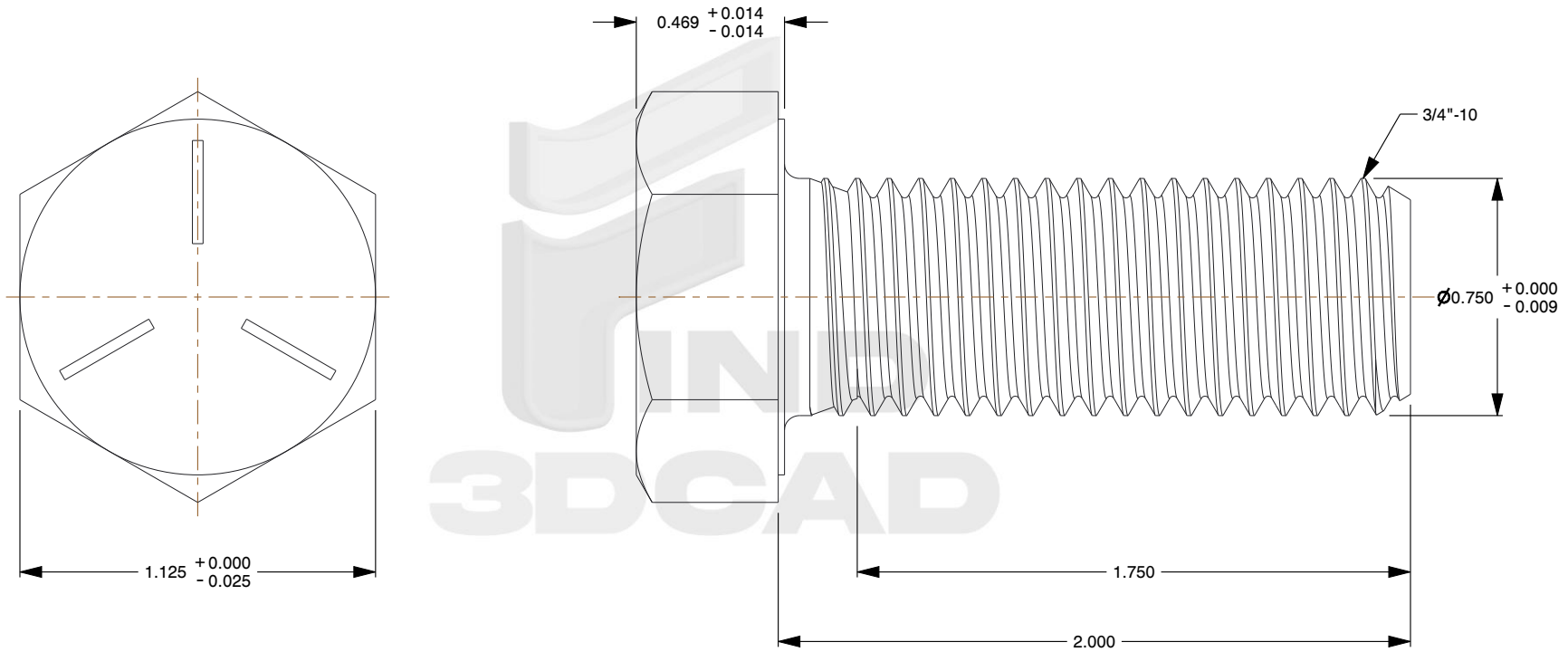


Notes:

1. **Category:** Cap Screws
2. **System of Measurement:** Inch
3. **Head Style:** Hex Head
4. **Head Style Detail:** Washer Face
5. **Head Markings:** Three radial lines 120 degrees apart and manufacturer ID
6. **Drive Style:** External Hex Drive
7. **Pitch:** Coarse Thread
8. **Thread Direction:** Right-Hand Thread
9. **Point:** Chamfered Point
10. **Material:** Steel
11. **Material Grade:** Grade 5
12. **Coating:** Cadmium Plated
13. **Coating Color:** Yellow
14. **Origin:** Made in U.S.A.
15. **Standards and Specifications:** MS90725, DFARS

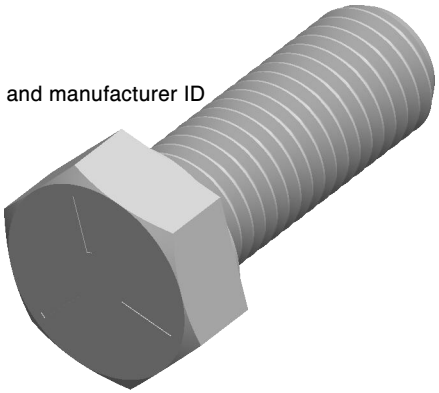

find3dcad

THIRD ANGLE PROJECTION

This file and the related information are provided for reference only and may change without notice. find3dcad does not guarantee the accuracy, completeness, or suitability of this file or the information provided. You are responsible for how you use this file and its information.

This document is the property of find3dcad. The information in it may not be copied, shared, or given to any third party without written permission from find3dcad.

| TITLE | DESCRIPTION |
|---|---|
| Hex Cap Screw | 3/4"-10 X 2" Hex Head Cap Screws Bolts, Coarse Thread, Grade 5 Steel, Yellow Cadmium Plating, MS90725, DFARS |

| Sheet Size | PART NUMBER | Rev. | ISSUED |
|---|---|---|---|
| A | IMHHCS3003-3410X2 | 01 | 2026-10-20 |

SCALE: 1.819 | Unless otherwise specified Dimensions are in INCHES