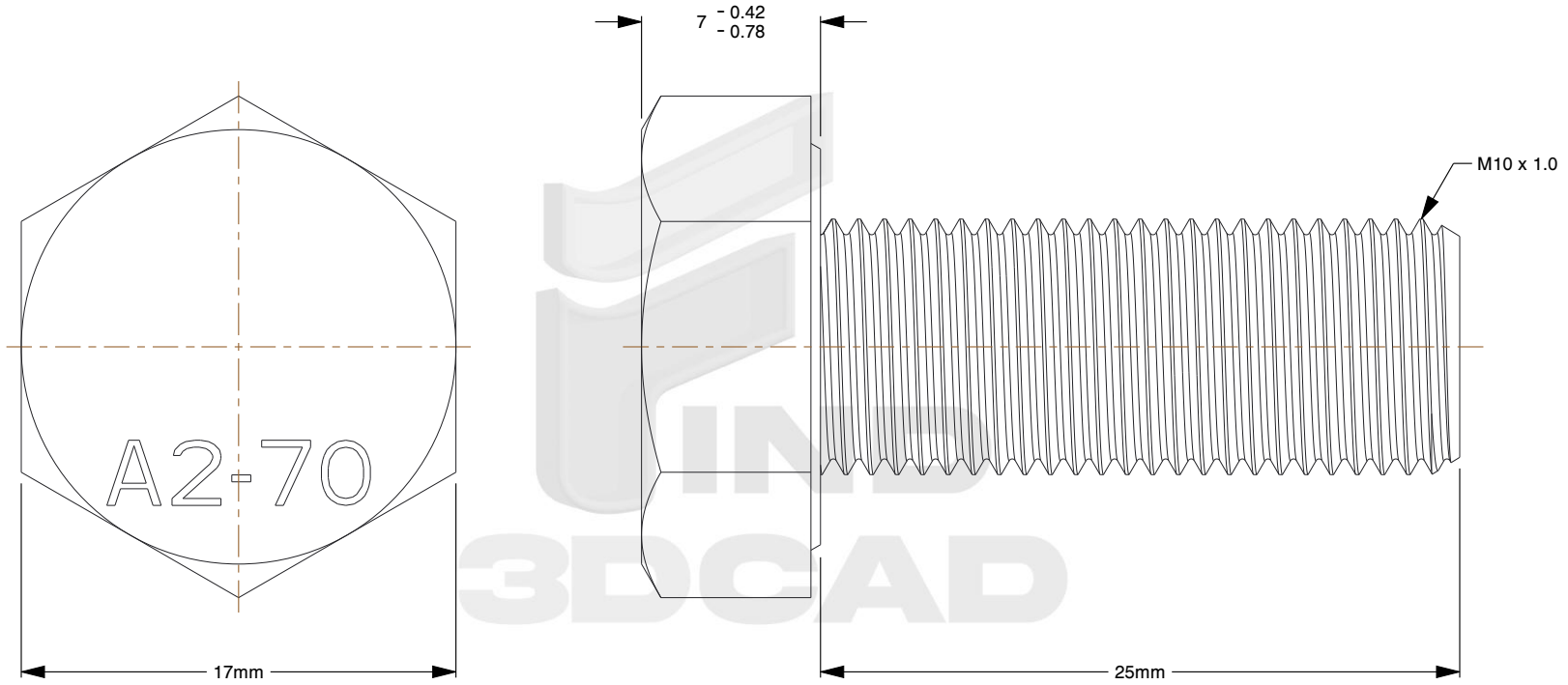

Notes:

1. **Specification:** DIN 961
2. **Thread Diameter + Pitch:** M10X1.0
3. **Length:** 25mm
4. **Thread Amount:** Full
5. **Threaded Length:** 25mm +/- 3mm
6. **Unthreaded Length:** 0mm
7. **Material:** A2-70 Stainless Steel
8. **Finish:** Plain
9. **Head Height:** 7.00mm
10. **Drive:** 17mm Wrench
11. **Type Screw/Bolt:** Hex Head
12. **Thread Direction:** Right Hand
13. **Measurement System:** Metric
14. **Head Markings:** A2-70

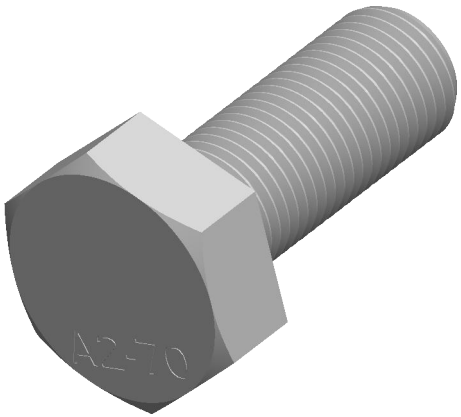

find3dcad

THIRD ANGLE PROJECTION

This file and the related information are provided for reference only and may change without notice. find3dcad does not guarantee the accuracy, completeness, or suitability of this file or the information provided. You are responsible for how you use this file and its information.

This document is the property of find3dcad. The information in it may not be copied, shared, or given to any third party without written permission from find3dcad.

TITLE	DESCRIPTION
Hex Bolts	M10X1.0 EXTRA Fine Hex Bolt Stainless Steel A2 DIN 961

Sheet Size	PART NUMBER	Rev.	ISSUED
A	MDHB410X1-0X25SS	01	2026-10-13

SCALE: 3.499	Unless otherwise specified Dimensions are in MILLIMETERS