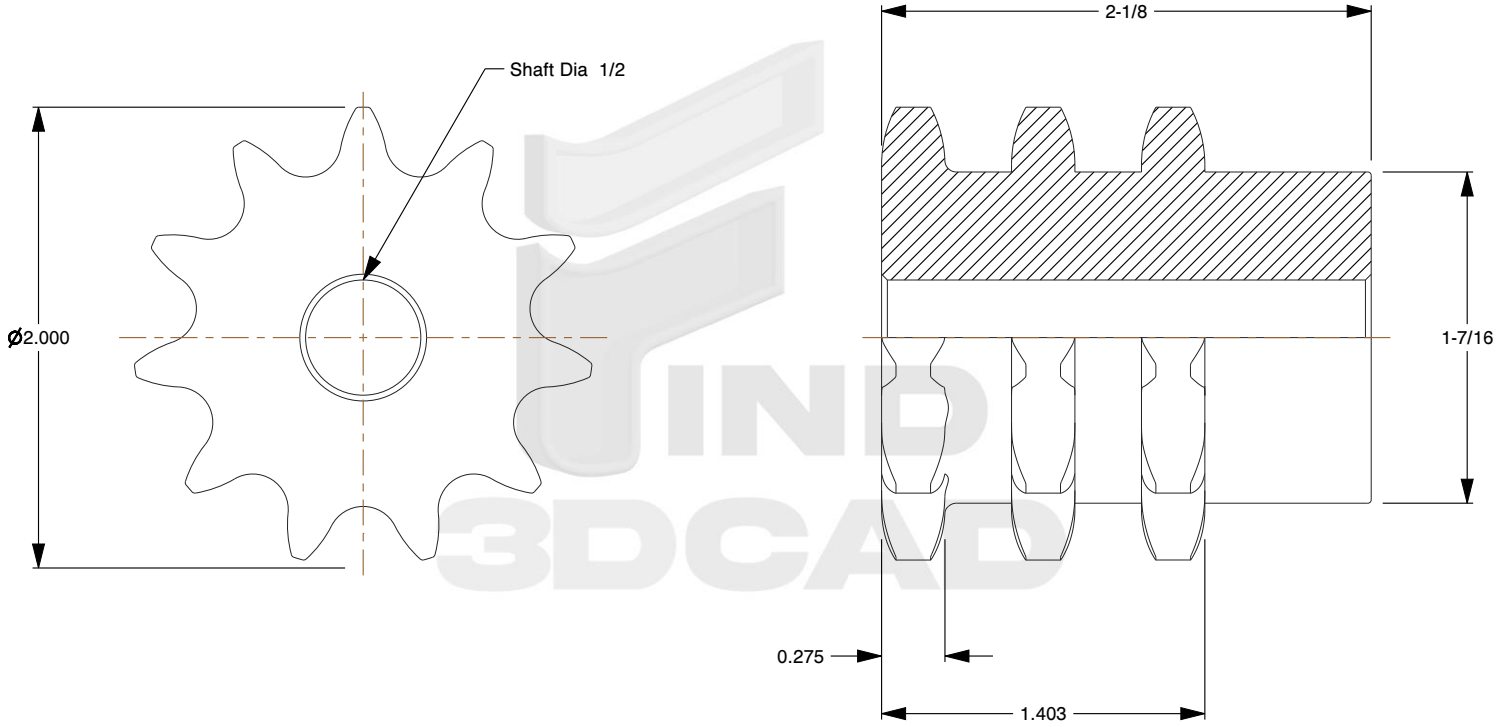

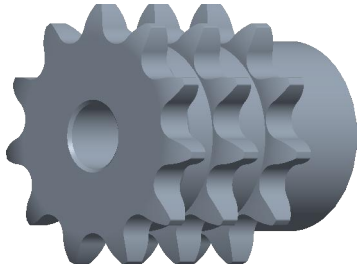

1. **Category:** Drive Sprocket
2. **Type:** Triple Sprocket
3. **ANSI Roller Chain No:** 40
4. **Number of Teeth:** 11
5. **Shaft Diameter:** 1/2
6. **Outer Diameter:** 2
7. **Hub Diameter:** 1-7/16
8. **Overall Width:** 2-1/8
9. **Material:** Steel

find3dcad	THIRD ANGLE PROJECTION
This file and the related information are provided for reference only and may change without notice. find3dcad does not guarantee the accuracy, completeness, or suitability of this file or the information provided. You are responsible for how you use this file and its information.	This document is the property of find3dcad. The information in it may not be copied, shared, or given to any third party without written permission from find3dcad.
DESCRIPTION Machinable Bore Double Sprockets, ANSI Roller Chain, Steel	TITLE Triple Sprockets

Sheet Size	PART NUMBER	Rev.	ISSUED
A	TSP40B11	01	2026-10-16

SCALE: 1.200	Unless otherwise specified Dimensions are in Inch