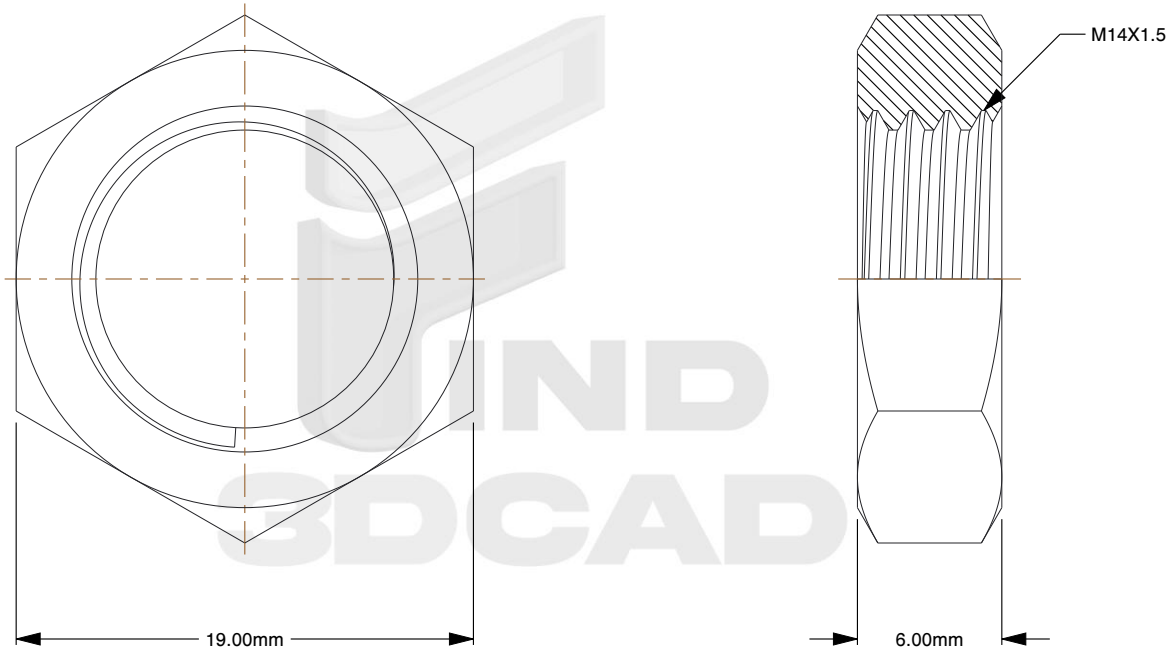

Notes:

1. **Thread Diameter + Pitch:** M14X1.5
2. **Thread Direction:** Right Hand
3. **Type:** Jam Nut
4. **Material:** 14H Carbon Steel
5. **Finish:** Zinc Plated
6. **Drive:** 19mm Wrench
7. **Height:** 6mm
8. **Profile:** Thin
9. **Measurement System:** Metric
10. **Specification:** DIN 80705

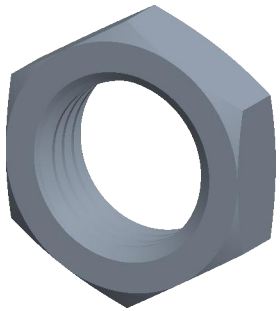

find3dcad

THIRD ANGLE PROJECTION

This file and the related information are provided for reference only and may change without notice. find3dcad does not guarantee the accuracy, completeness, or suitability of this file or the information provided. You are responsible for how you use this file and its information.

This document is the property of find3dcad. The information in it may not be copied, shared, or given to any third party without written permission from find3dcad.

TITLE	DESCRIPTION
Hex Nuts	Jam Thin Nut, Fine Steel Class 14H DIN 80705 Small Wrench

Sheet Size	PART NUMBER	Rev.	ISSUED
A	MDFTN14X1-5X19CLZ	01	2026-10-13

SCALE: 3.184	Unless otherwise specified Dimensions are in MILLIMETERS