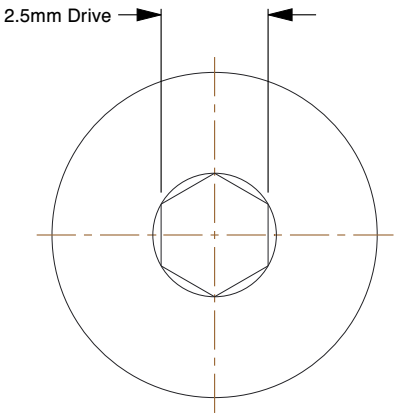

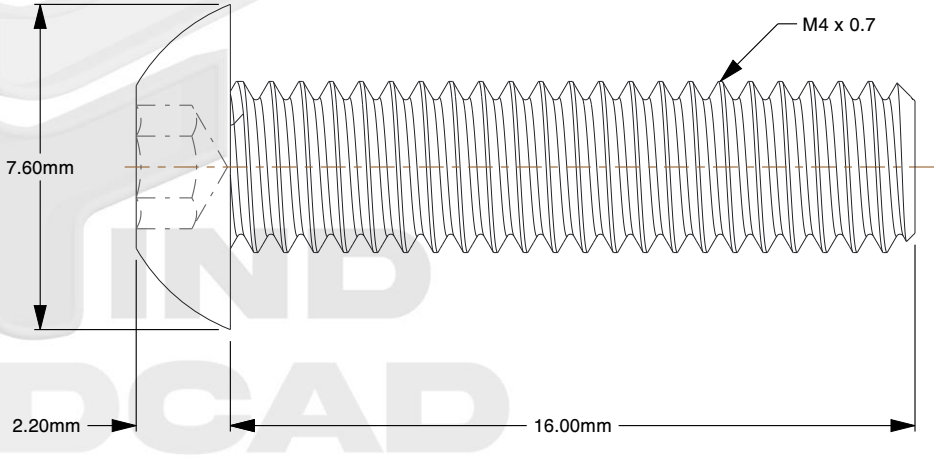

Notes:

1. **Specification:** ISO 7380-1
2. **Thread Diameter + Pitch:** M4X0.7
3. **Length:** 16mm
4. **Thread Amount:** Full Thread
5. **Threaded Length:** 16mm
6. **Unthreaded Length:** 0mm
7. **Material:** Class 10.9 Steel
8. **Finish:** Black Oxide
9. **Head Diameter:** 7.6mm
10. **Head Height:** 2.2mm
11. **Drive:** 2.5mm Allen Socket
12. **Type Screw/Bolt:** Button Head
13. **Thread Direction:** Right Hand
14. **Measurement System:** Metric

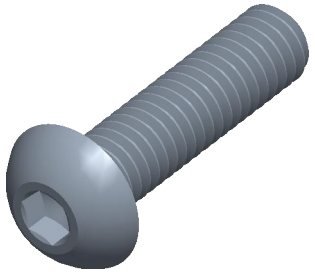

find3dcad

THIRD ANGLE PROJECTION

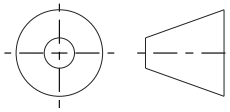

This file and the related information are provided for reference only and may change without notice. find3dcad does not guarantee the accuracy, completeness, or suitability of this file or the information provided. You are responsible for how you use this file and its information.

This document is the property of find3dcad. The information in it may not be copied, shared, or given to any third party without written permission from find3dcad.

TITLE	DESCRIPTION
Button Head	M4 Button Socket Head Steel Class 10.9 ISO 7380-1

Sheet Size	PART NUMBER	Rev.	ISSUED
A	MIHSBHS4X16	01	2026-10-13

SCALE: 5.661	Unless otherwise specified Dimensions are in MILLIMETERS