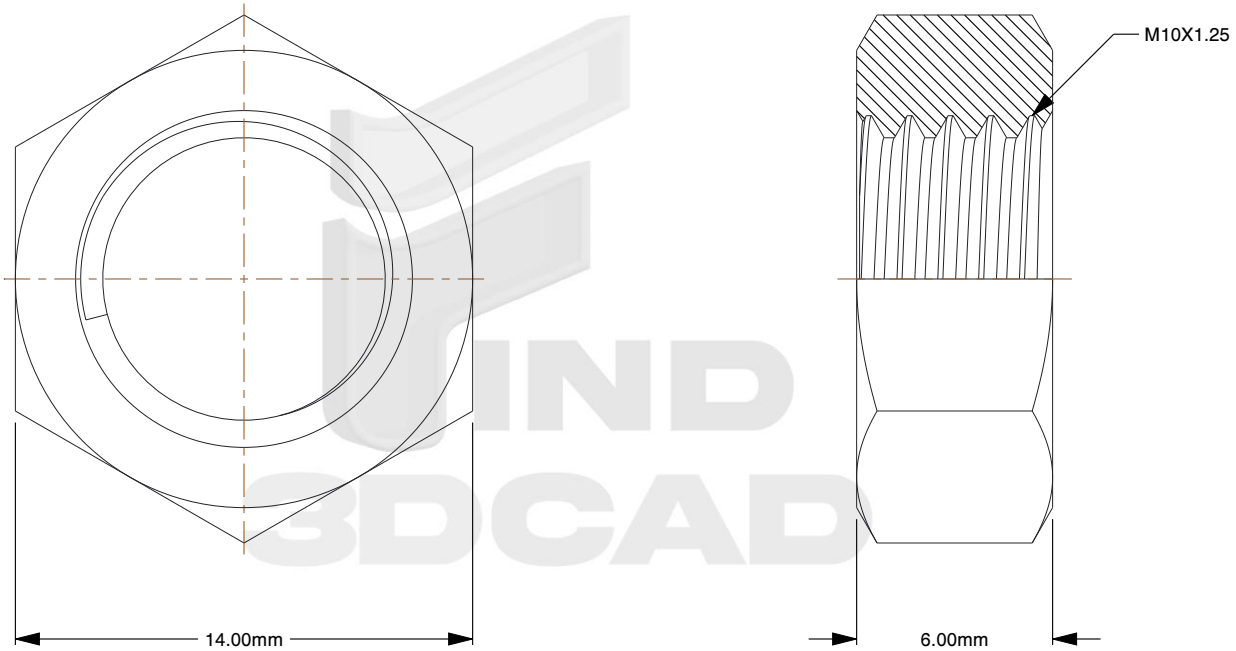

Notes:

1. **Thread Diameter + Pitch:** M10X1.25
2. **Thread Direction:** Right Hand
3. **Type:** Jam Nut
4. **Material:** Steel
5. **Finish:** Zinc Plated
6. **Drive:** 14mm Wrench
7. **Height:** 6mm
8. **Profile:** Thin
9. **Measurement System:** Metric
10. **Specification:** JIS B1181 Class 3

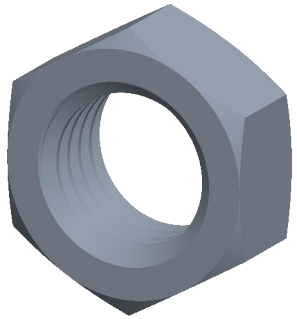

find3dcad

THIRD ANGLE PROJECTION

This file and the related information are provided for reference only and may change without notice. find3dcad does not guarantee the accuracy, completeness, or suitability of this file or the information provided. You are responsible for how you use this file and its information.

This document is the property of find3dcad. The information in it may not be copied, shared, or given to any third party without written permission from find3dcad.

TITLE	DESCRIPTION
Jam Nut	Jam Thin Nut, Fine Steel Class 04 JIS B-1181 Small Wrench

Sheet Size	PART NUMBER	Rev.	ISSUED
A	MJJN310X1-25X14CLZ	01	2026-10-13

SCALE: 4.321	Unless otherwise specified Dimensions are in MILLIMETERS