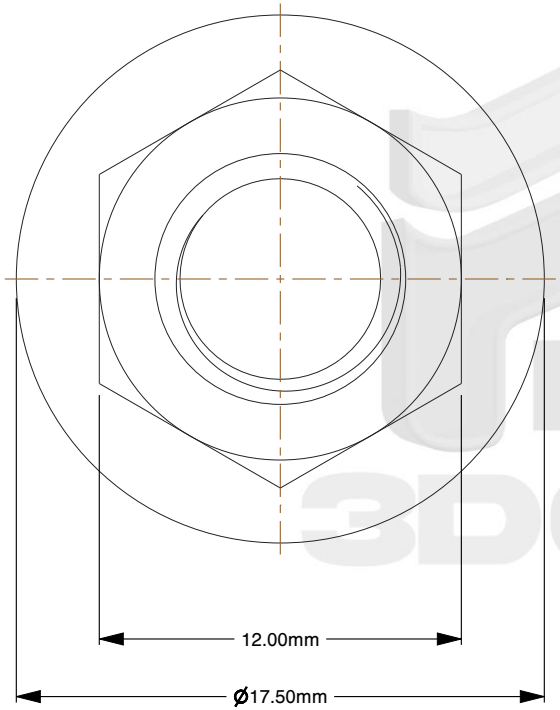

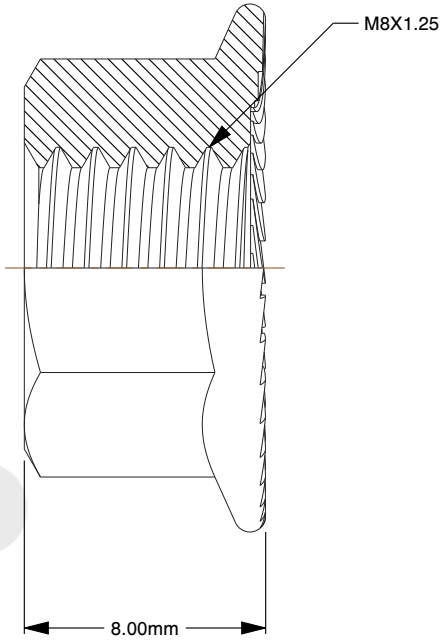

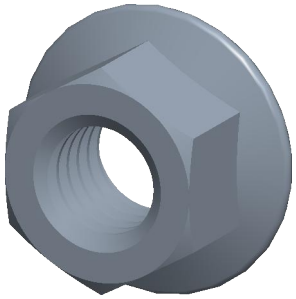

Notes:

1. **Thread Diameter + Pitch:** M8X1.25
2. **Thread Direction:** Right Hand
3. **Type:** Flange Nut
4. **Material:** Class 10 Steel
5. **Finish:** Yellow Zinc Plated
6. **Drive:** 12mm Wrench
7. **Height:** 8mm
8. **Flange Width:** 17.5mm
9. **Flange Type:** Serrated
10. **Measurement System:** Metric
11. **Specification:** JIS B1190

find3dcad

THIRD ANGLE PROJECTION

This file and the related information are provided for reference only and may change without notice. find3dcad does not guarantee the accuracy, completeness, or suitability of this file or the information provided. You are responsible for how you use this file and its information.

This document is the property of find3dcad. The information in it may not be copied, shared, or given to any third party without written permission from find3dcad.

TITLE	DESCRIPTION
Flange Nuts	Serrated Flange Nut JIS B1190 Steel Class 10 Small Wrench Coarse + Fine Thread

Sheet Size	PART NUMBER	Rev.	ISSUED
A	MJSRFN8X12YLW	01	2026-10-20

SCALE: 3.991	Unless otherwise specified Dimensions are in MILLIMETERS