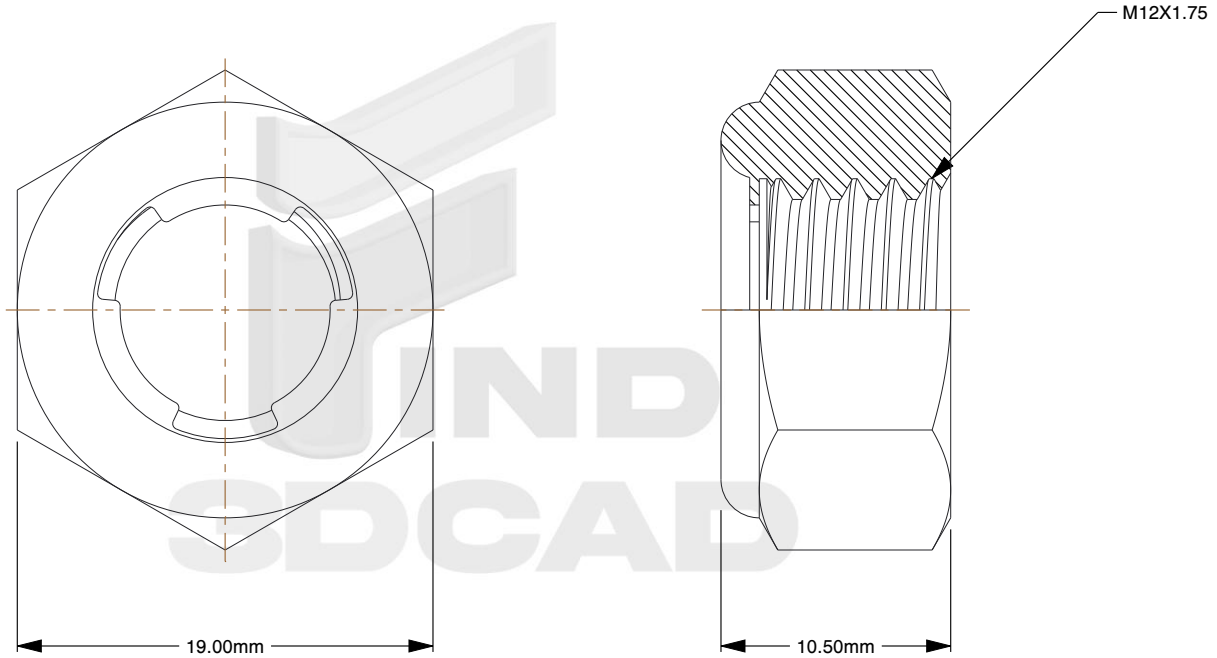

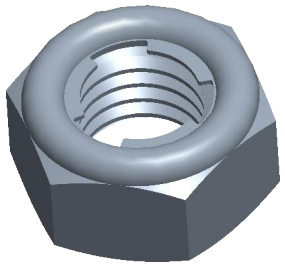

Notes:

1. **Thread Diameter + Pitch:** M12X1.75
2. **Thread Direction:** Right Hand
3. **Type:** Fuji Nut
4. **Material:** Class 6 Steel
5. **Finish:** Zinc Plated
6. **Drive:** 19mm Wrench
7. **Height:** 10.5mm
8. **Profile:** Normal
9. **Measurement System:** Metric
10. **Specification:** DIN 980

find3dcad

THIRD ANGLE PROJECTION

This file and the related information are provided for reference only and may change without notice. find3dcad does not guarantee the accuracy, completeness, or suitability of this file or the information provided. You are responsible for how you use this file and its information.

This document is the property of find3dcad. The information in it may not be copied, shared, or given to any third party without written permission from find3dcad.

TITLE	DESCRIPTION
Fuji Lock Nut	Fuji Lock Nut Steel Class 6, Zinc Base DIN 980M

Sheet Size	PART NUMBER	Rev.	ISSUED
A	MDFLN12	01	2026-10-16

SCALE: 2.894	Unless otherwise specified Dimensions are in MILLIMETERS