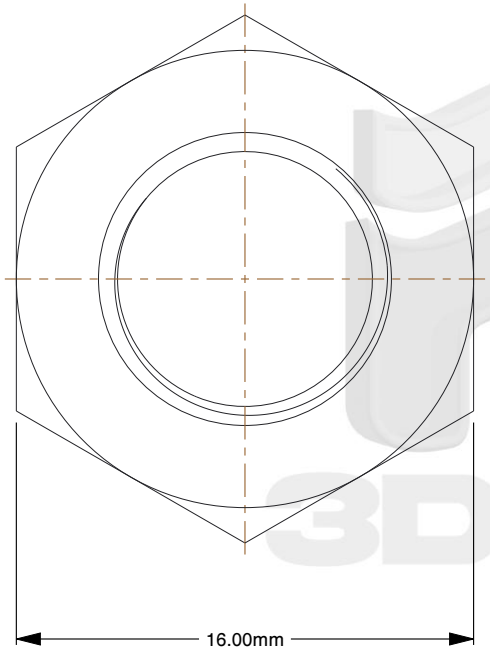

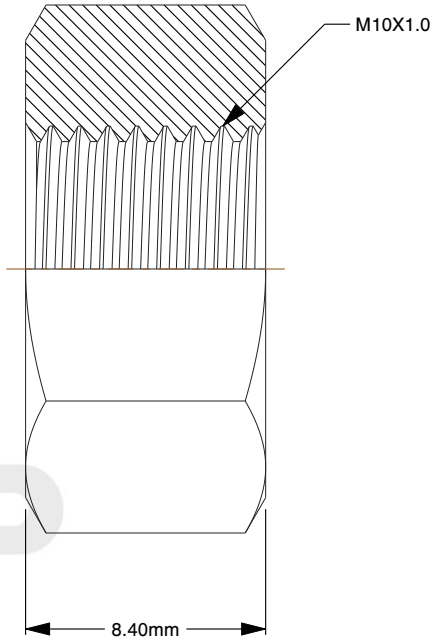

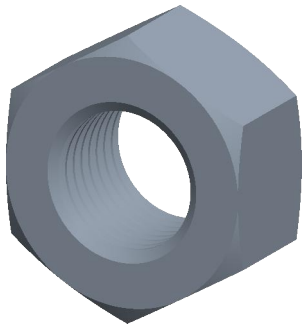

Notes:

1. **Thread Diameter + Pitch:** M10X1.0
2. **Thread Direction:** Right Hand
3. **Type:** Hex Nut
4. **Material:** Brass
5. **Finish:** Plain
6. **Drive:** 16mm Wrench
7. **Height:** 8.4mm
8. **Measurement System:** Metric
9. **Specification:** ISO 8673

find3dcad

THIRD ANGLE PROJECTION

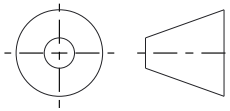

This file and the related information are provided for reference only and may change without notice. find3dcad does not guarantee the accuracy, completeness, or suitability of this file or the information provided. You are responsible for how you use this file and its information.

This document is the property of find3dcad. The information in it may not be copied, shared, or given to any third party without written permission from find3dcad.

TITLE	DESCRIPTION
Hex Nuts	Fine ISO 8673 Nut Brass Plain Finish

Sheet Size	PART NUMBER	Rev.	ISSUED
A	MIFN10X1-0X16BRS	01	2026-10-16

SCALE: 3.781	Unless otherwise specified Dimensions are in MILLIMETERS