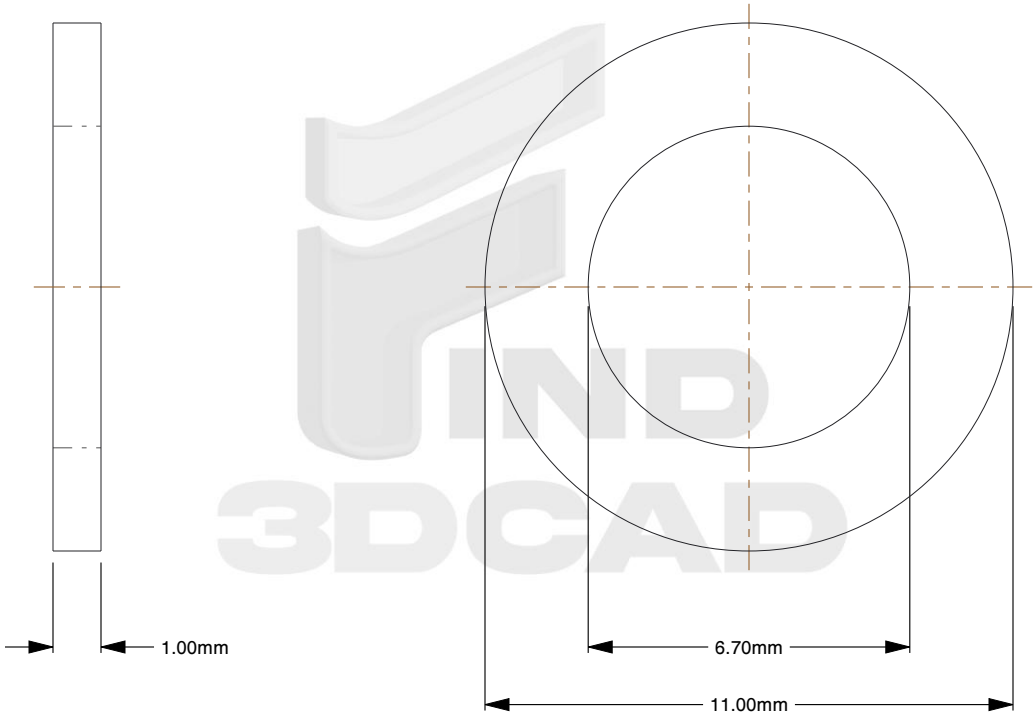

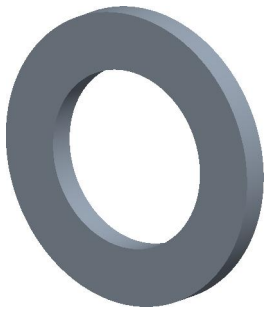

Notes:

1. **For Screw/Bolt Size:** M6.5
2. **Type:** Gasket / Sealing Ring
3. **Form:** Flat
4. **Material:** Copper
5. **Finish:** Plain
6. **Thickness:** 0.8mm - 1.2mm
7. **Inner Diameter:** 6.7mm - 7mm
8. **Outer Diameter:** 10.7mm - 11mm
9. **Measurement System:** Metric
10. **Specification:** DIN 7603

find3dcad

THIRD ANGLE PROJECTION

This file and the related information are provided for reference only and may change without notice. find3dcad does not guarantee the accuracy, completeness, or suitability of this file or the information provided. You are responsible for how you use this file and its information.

This document is the property of find3dcad. The information in it may not be copied, shared, or given to any third party without written permission from find3dcad.

TITLE	DESCRIPTION
Gasket Washer	Copper Crush 1.0mm Thick Corrosion Resistant Gasket DIN 7603 Solid Washer

Sheet Size	PART NUMBER	Rev.	ISSUED
A	MDFCGW6-5X11X1-0	01	2026-10-20

SCALE: 6.350	Unless otherwise specified Dimensions are in MILLIMETERS