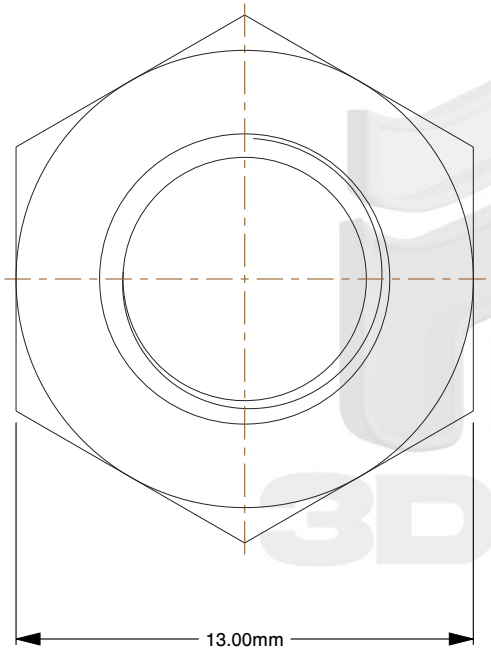

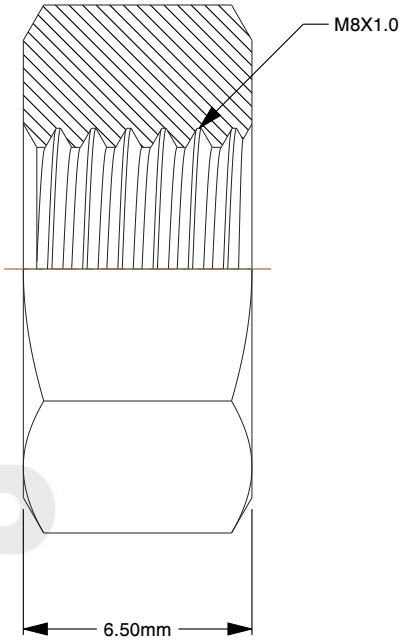

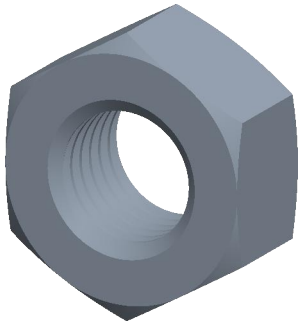

Notes:

1. **Thread Diameter + Pitch:** M8X1.0
2. **Thread Direction:** Right Hand
3. **Type:** Hex Nut
4. **Material:** A2-70 Stainless Steel
5. **Finish:** Plain
6. **Drive:** 13mm Wrench
7. **Height:** 6.5mm
8. **Measurement System:** Metric
9. **Specification:** DIN 934

find3dcad

THIRD ANGLE PROJECTION

This file and the related information are provided for reference only and may change without notice. find3dcad does not guarantee the accuracy, completeness, or suitability of this file or the information provided. You are responsible for how you use this file and its information.

This document is the property of find3dcad. The information in it may not be copied, shared, or given to any third party without written permission from find3dcad.

TITLE	DESCRIPTION
Hex Nut	Fine DIN 934 Nut A2 Stainless Steel Passivated

Sheet Size	PART NUMBER	Rev.	ISSUED
A	MDHN28X1-0SS	01	2026-10-20

SCALE: 4.653	Unless otherwise specified Dimensions are in MILLIMETERS