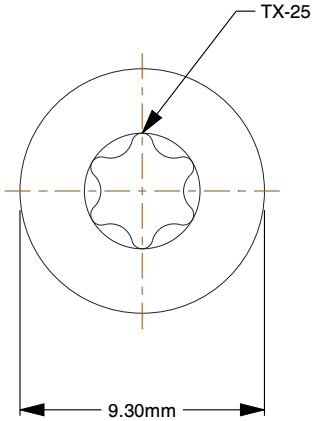

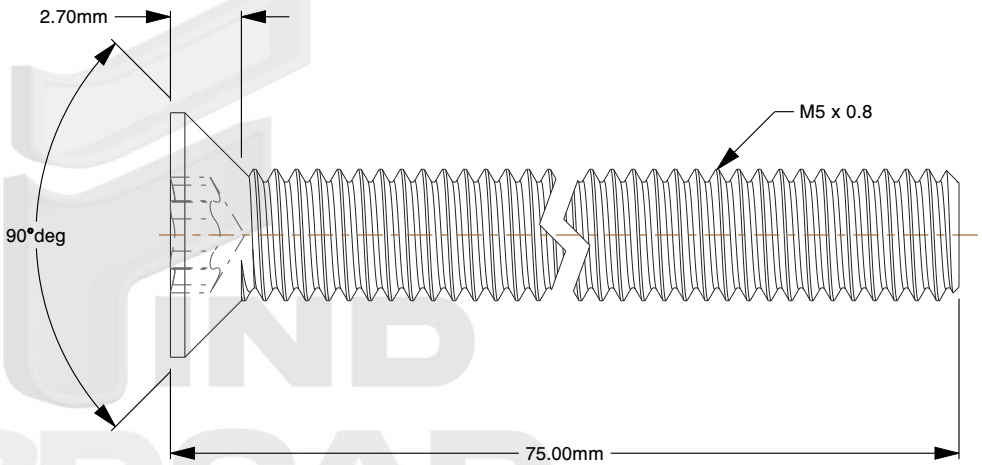

FIND 3DCAD

Notes:

1. **Specification:** ISO 14581
2. **Thread Diameter + Pitch:** M5X0.8
3. **Overall Length:** 75mm
4. **Thread Amount:** Full Thread
5. **Material:** A2-50 Stainless Steel
6. **Finish:** Plain
7. **Head Diameter:** 9.3mm
8. **Head Height:** 2.7mm
9. **Drive:** T25 Torx Socket
10. **Type Screw/Bolt:** Flat Head
11. **Thread Direction:** Right Hand

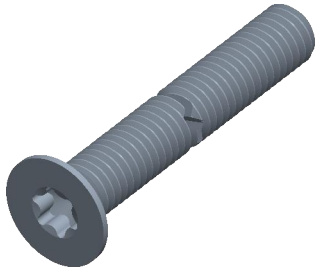

find3dcad

THIRD ANGLE PROJECTION

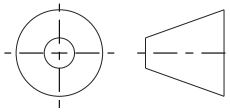

This file and the related information are provided for reference only and may change without notice. find3dcad does not guarantee the accuracy, completeness, or suitability of this file or the information provided. You are responsible for how you use this file and its information.

This document is the property of find3dcad. The information in it may not be copied, shared, or given to any third party without written permission from find3dcad.

TITLE	DESCRIPTION
Flat Head Screws	M5 Torx Flat Head Stainless Steel ISO 14581 TX-25

Sheet Size	PART NUMBER	Rev.	ISSUED
A	MITFHS5X75TXSS	01	2026-10-16

SCALE: 3.477	Unless otherwise specified Dimensions are in MILLIMETERS