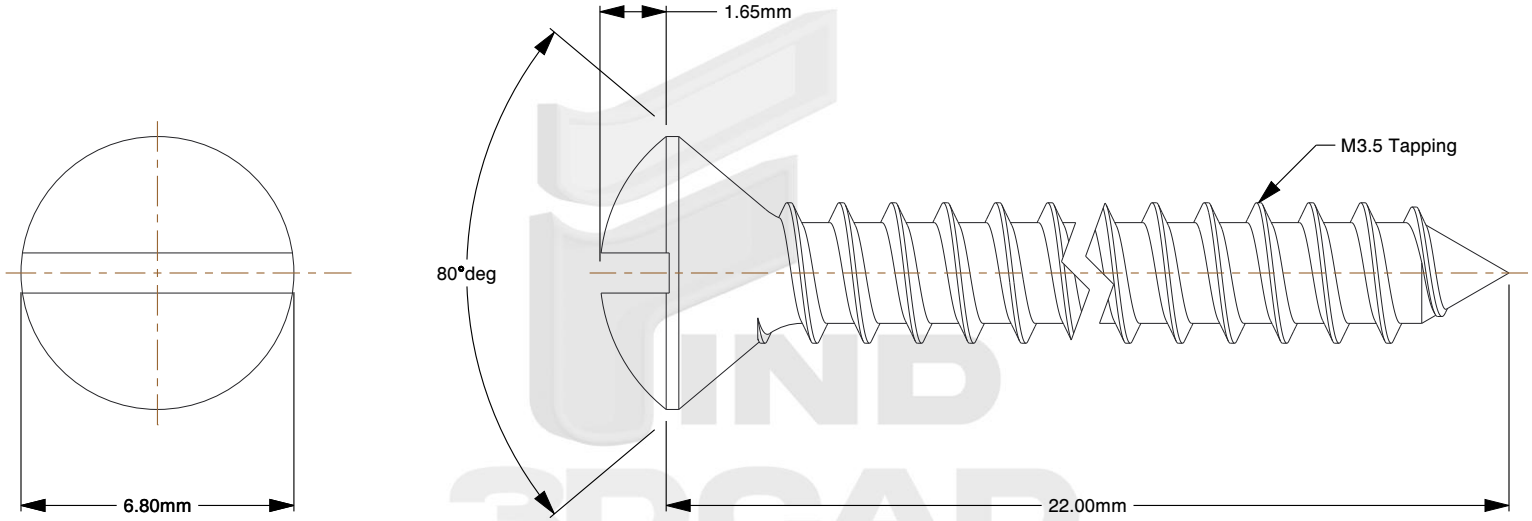

Notes:

1. **Specification:** DIN 7973
2. **Thread Diameter + Pitch:** M3.5 Tapping
3. **Overall Length:** 22mm
4. **Thread Amount:** Full Thread
5. **Material:** Stainless Steel
6. **Finish:** Plain
7. **Head Diameter:** 6.8mm
8. **Head Height:** 1.65mm
9. **Drive:** Slotted
10. **Type Screw/Bolt:** Oval Head Tapping Bolt/Screw
11. **Thread Direction:** Right Hand
12. **Measurement System:** Metric

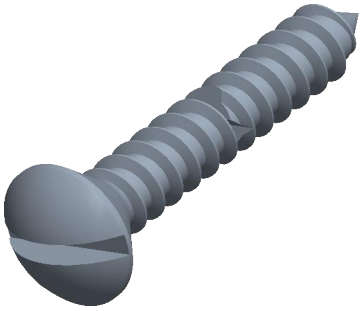

find3dcad

THIRD ANGLE PROJECTION

This file and the related information are provided for reference only and may change without notice. find3dcad does not guarantee the accuracy, completeness, or suitability of this file or the information provided. You are responsible for how you use this file and its information.

This document is the property of find3dcad. The information in it may not be copied, shared, or given to any third party without written permission from find3dcad.

TITLE	DESCRIPTION
Oval Head Tapping Screws	M3.5 Oval Slotted Tapping Stainless Steel DIN 7973-C

Sheet Size	PART NUMBER	Rev.	ISSUED
A	MDSOTS3-5X22SS	01	2026-10-16

SCALE: 5.309	Unless otherwise specified Dimensions are in MILLIMETERS