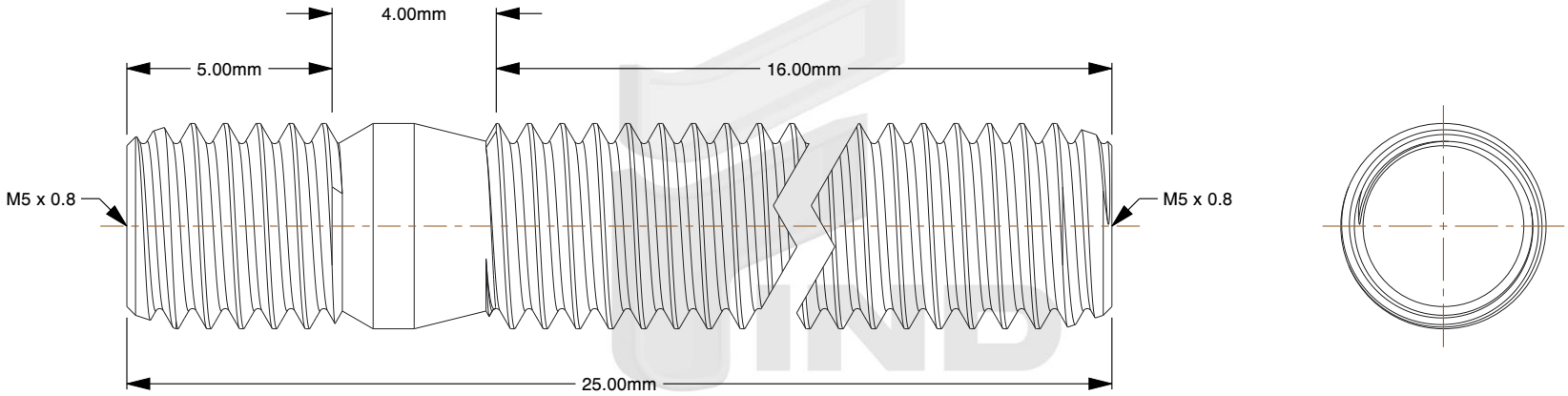

Notes:

1. **Specification:** DIN 938
2. **Thread Diameter + Pitch:** M5X0.8
3. **Overall Length:** 25mm
4. **Longer Thread Length:** 16mm
5. **Middle Shank Length:** 4mm
6. **Shorter Thread Length:** 5mm
7. **Material:** Class 8.8 Steel
8. **Finish:** Black Oxide
9. **Type Studs/Rods:** Offset Double End Stud
10. **Thread Direction:** Right Hand
11. **Measurement System:** Metric

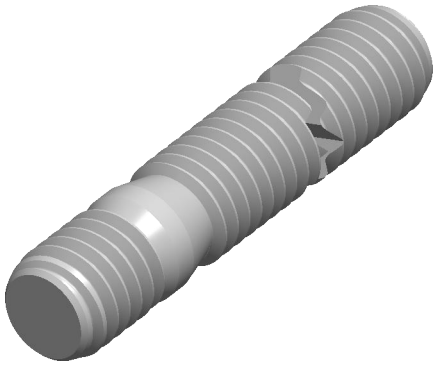

find3dcad

THIRD ANGLE PROJECTION

This file and the related information are provided for reference only and may change without notice. find3dcad does not guarantee the accuracy, completeness, or suitability of this file or the information provided. You are responsible for how you use this file and its information.

This document is the property of find3dcad. The information in it may not be copied, shared, or given to any third party without written permission from find3dcad.

TITLE	DESCRIPTION
Offset Double End Stud	M5X0.8 Double End Stud Steel Class 5.8 DIN 938

Sheet Size	PART NUMBER	Rev.	ISSUED
A	MDODES1D5X25DBLK	01	2026-10-13

SCALE: 0.224	Unless otherwise specified Dimensions are in MILLIMETERS