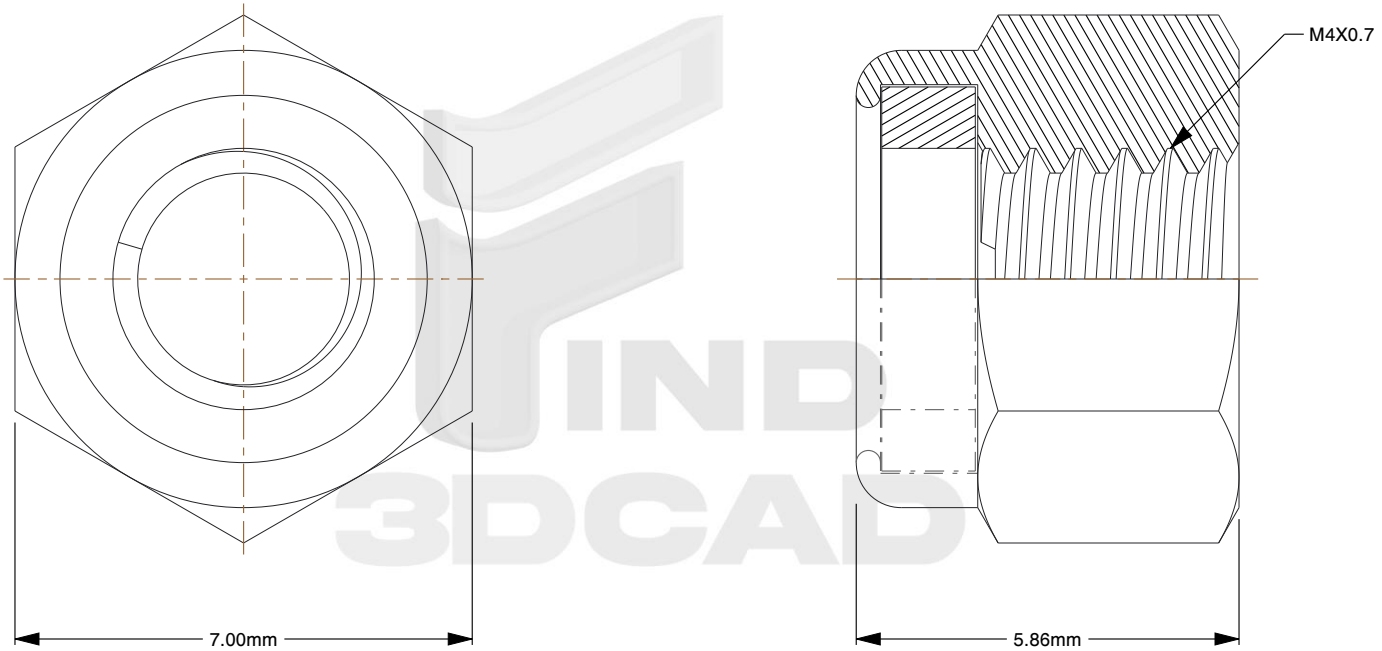

Notes:

1. **Thread Diameter + Pitch:** M4X0.7
2. **Thread Direction:** Right Hand
3. **Type:** Nylon Locking Nut
4. **Material:** A2-70 Stainless Steel
5. **Finish:** Plain
6. **Drive:** 7mm Wrench
7. **Height:** 5.86mm
8. **Profile:** High
9. **Measurement System:** Metric
10. **Specification:** DIN 982

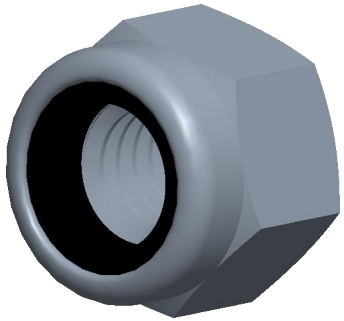

find3dcad

THIRD ANGLE PROJECTION

This file and the related information are provided for reference only and may change without notice. find3dcad does not guarantee the accuracy, completeness, or suitability of this file or the information provided. You are responsible for how you use this file and its information.

This document is the property of find3dcad. The information in it may not be copied, shared, or given to any third party without written permission from find3dcad.

TITLE	DESCRIPTION
Nylon Locking Nut	Coarse DIN 982 HIGH Nylon Nut A2 Stainless Steel Passivated

Sheet Size	PART NUMBER	Rev.	ISSUED
A	MDNLN4HIGHSS	01	2026-10-16

SCALE: 8.642	Unless otherwise specified Dimensions are in MILLIMETERS