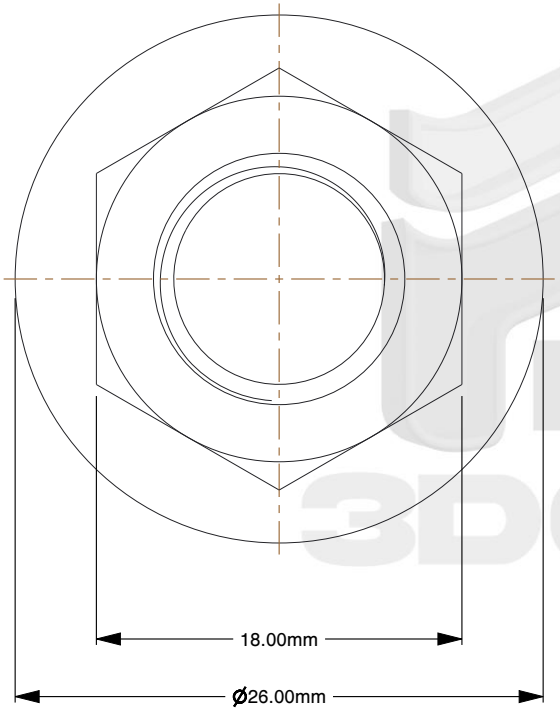

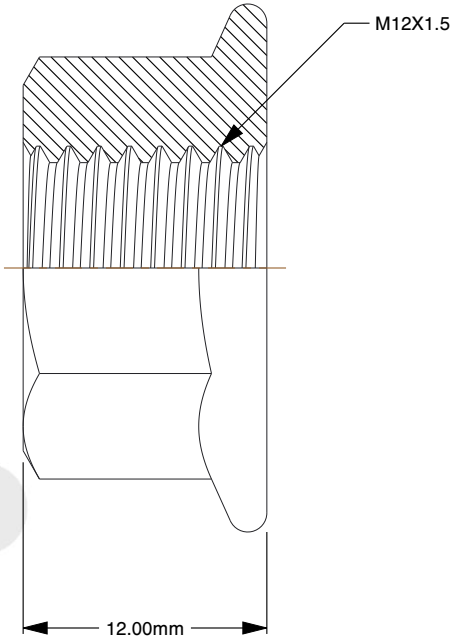

Notes:

1. **Thread Diameter + Pitch:** M12X1.5
2. **Thread Direction:** Right Hand
3. **Type:** Flange Nut
4. **Material:** Class 8 Steel
5. **Finish:** Yellow Zinc Plated
6. **Drive:** 18mm Wrench
7. **Height:** 12mm
8. **Flange Width:** 26mm
9. **Flange Type:** Smooth
10. **Measurement System:** Metric
11. **Specification:** DIN 6923

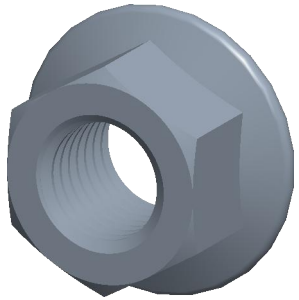

find3dcad

THIRD ANGLE PROJECTION

This file and the related information are provided for reference only and may change without notice. find3dcad does not guarantee the accuracy, completeness, or suitability of this file or the information provided. You are responsible for how you use this file and its information.

This document is the property of find3dcad. The information in it may not be copied, shared, or given to any third party without written permission from find3dcad.

TITLE	DESCRIPTION
Flange Nut	Smooth Flange Nut DIN 6923 Steel Class 8 Zinc Plated Fine Thread

Sheet Size	PART NUMBER	Rev.	ISSUED
A	MDSFN12X1-5X18YLW	01	2026-10-13

SCALE: 2.687	Unless otherwise specified Dimensions are in MILLIMETERS