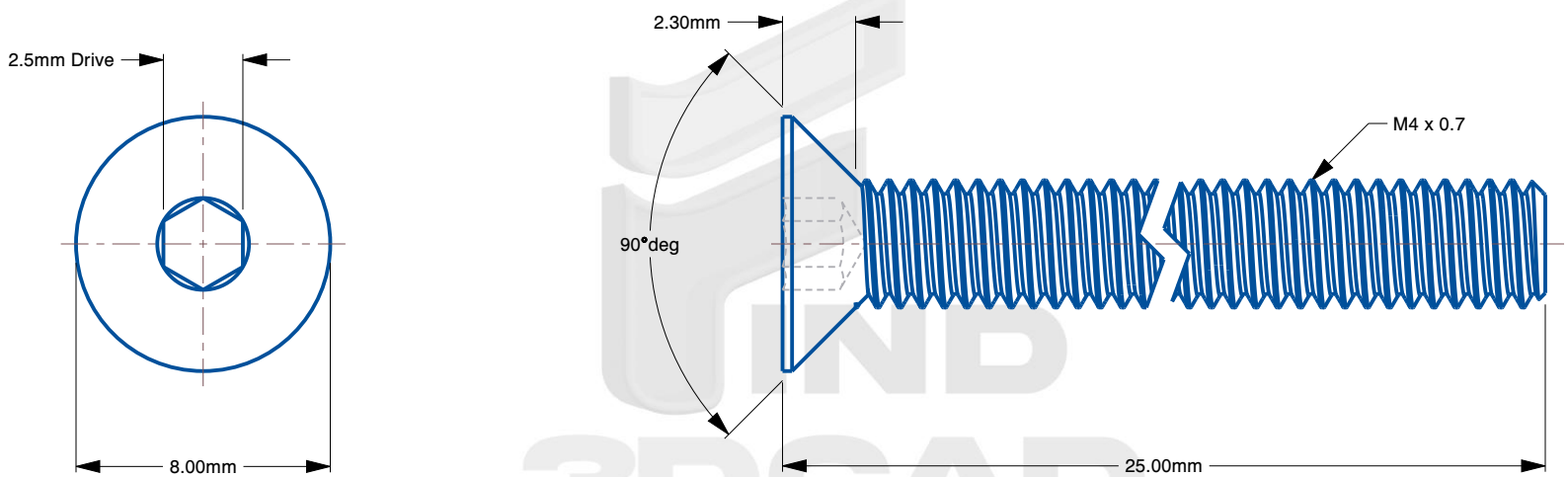

Notes:

1. **Specification:** DIN 7991
2. **Thread Diameter + Pitch:** M4X0.7
3. **Overall Length:** 25mm
4. **Thread Amount:** Full Thread
5. **Material:** Class 10.9 Steel
6. **Finish:** Black Oxide
7. **Head Diameter:** 8mm
8. **Head Height:** 2.3mm
9. **Drive:** 2.5mm Allen Socket
10. **Type Screw/Bolt:** Flat Head
11. **Thread Direction:** Right Hand
12. **Measurement System:** Metric

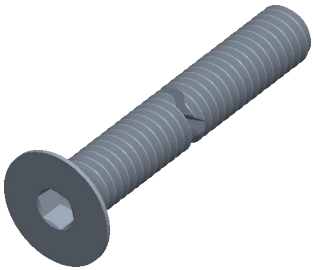

find3dcad

THIRD ANGLE PROJECTION

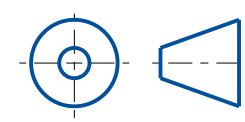

This file and the related information are provided for reference only and may change without notice. find3dcad does not guarantee the accuracy, completeness, or suitability of this file or the information provided. You are responsible for how you use this file and its information.

This document is the property of find3dcad. The information in it may not be copied, shared, or given to any third party without written permission from find3dcad.

TITLE	DESCRIPTION
Flat Head Screws	M4 Flat Socket Head Steel Class 10.9 Countersunk DIN 7991

Sheet Size	PART NUMBER	Rev.	ISSUED
A	MDFSHS4X25	01	2026-10-22

SCALE: 4.258 | Unless otherwise specified Dimensions are in MILLIMETERS