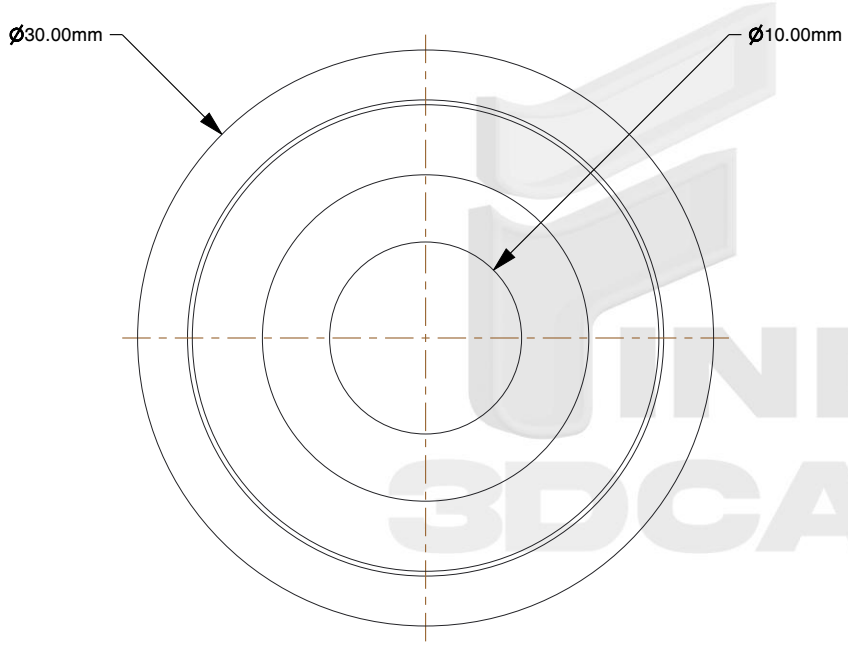

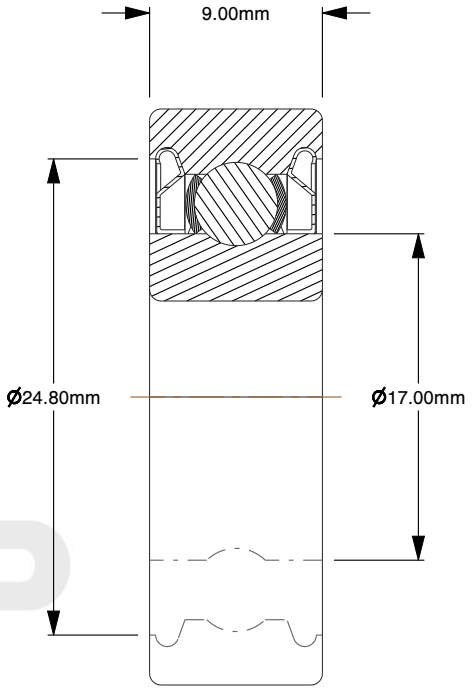

Notes:

1. **Bearing Type:** Deep groove ball bearing
2. **Bore type:** Cylindrical
3. **Sealing:** Shield on Both sides
4. **Sealing type:** Non-contact
5. **Number of rows:** 1
6. **Filling slots:** Without
7. **Bore diameter:** 10mm
8. **Outside diameter:** 30mm
9. **Width:** 9mm
10. **Series:** 2Z

    Z shield on both sides of the bearing

    acrylonitrile-butadiene rubber (NBR) on one side of the bearing

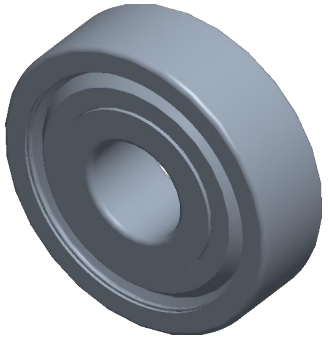

find3dcad

THIRD ANGLE PROJECTION

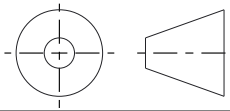

This file and the related information are provided for reference only and may change without notice. find3dcad does not guarantee the accuracy, completeness, or suitability of this file or the information provided. You are responsible for how you use this file and its information.

This document is the property of find3dcad. The information in it may not be copied, shared, or given to any third party without written permission from find3dcad.

DESCRIPTION

Deep groove ball bearing
with shields

TITLE

Ball Bearing

Sheet Size	PART NUMBER	Rev.	ISSUED
A	6200-2Z	01	2026-10-16

SCALE: 2.540

Unless otherwise specified Dimensions are in MILLIMETERS