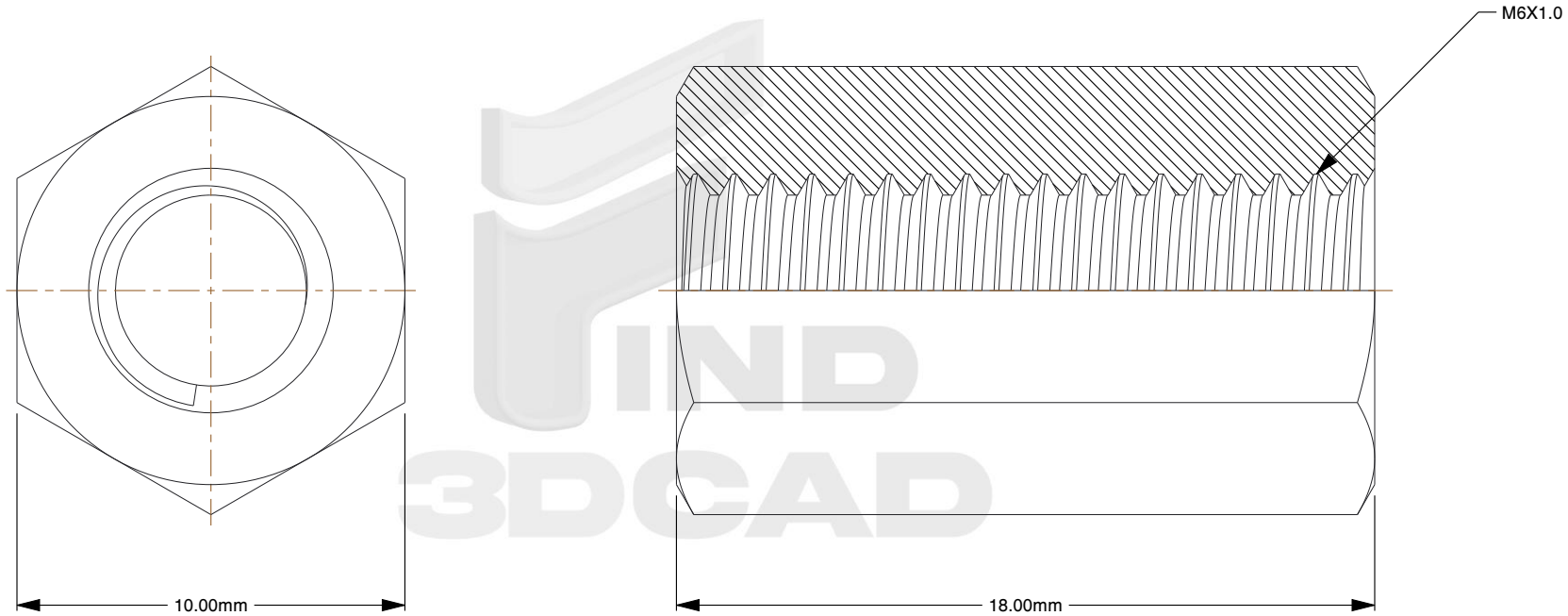

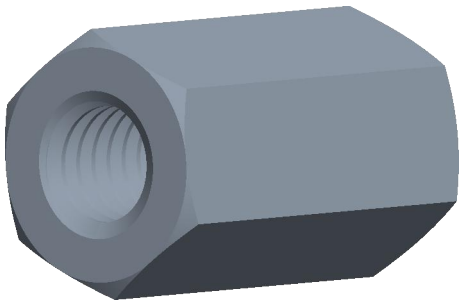

Notes:

1. **Thread Diameter + Pitch:** M6X1.0
2. **Thread Direction:** Right Hand
3. **Type:** Coupling Nut
4. **Material:** Class 6 Steel
5. **Finish:** Zinc Plated
6. **Drive:** 10mm Wrench
7. **Profile:** Normal
8. **Overall Length:** 18mm
9. **Measurement System:** Metric
10. **Specification:** DIN 6334

find3dcad

THIRD ANGLE PROJECTION

This file and the related information are provided for reference only and may change without notice. find3dcad does not guarantee the accuracy, completeness, or suitability of this file or the information provided. You are responsible for how you use this file and its information.

This document is the property of find3dcad. The information in it may not be copied, shared, or given to any third party without written permission from find3dcad.

TITLE	DESCRIPTION
Hex Coupling Nut	Hex Coupler Nut DIN 6334 Steel Class 6 Zinc Length 3x Diameter

Sheet Size	PART NUMBER	Rev.	ISSUED
A	MDHCN6X18CLZ	01	2026-10-20

SCALE: 5.443	Unless otherwise specified Dimensions are in MILLIMETERS