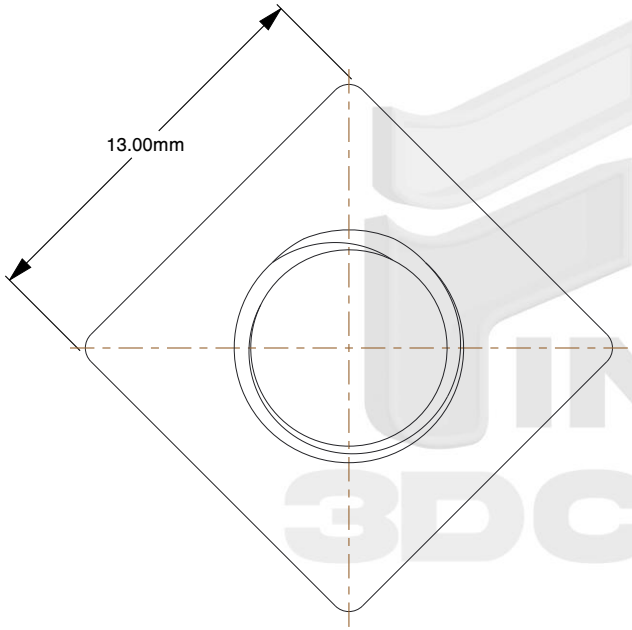

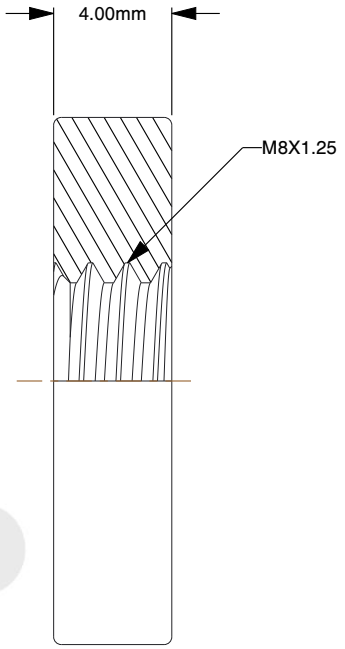

Notes:

1. **Thread Diameter + Pitch:** M8X1.25
2. **Thread Direction:** Right Hand
3. **Type:** Square Nut
4. **Material:** Class 4 Steel
5. **Finish:** Zinc Plated
6. **Drive:** Square
7. **Profile:** Thin
8. **Height:** 4mm
9. **Length:** 13mm
10. **Width:** 13mm
11. **Measurement System:** Metric
12. **Specification:** DIN 562

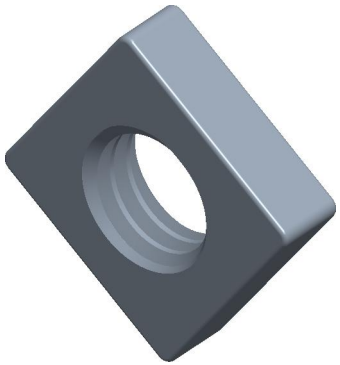

find3dcad

THIRD ANGLE PROJECTION

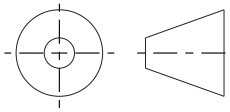

This file and the related information are provided for reference only and may change without notice. find3dcad does not guarantee the accuracy, completeness, or suitability of this file or the information provided. You are responsible for how you use this file and its information.

This document is the property of find3dcad. The information in it may not be copied, shared, or given to any third party without written permission from find3dcad.

TITLE	DESCRIPTION
Square Nuts	Square Nut Thin Style Class 04 Steel Zinc DIN 562

Sheet Size	PART NUMBER	Rev.	ISSUED
A	8JAMCLZ	01	2026-10-13

SCALE: 3.908	Unless otherwise specified Dimensions are in MILLIMETERS