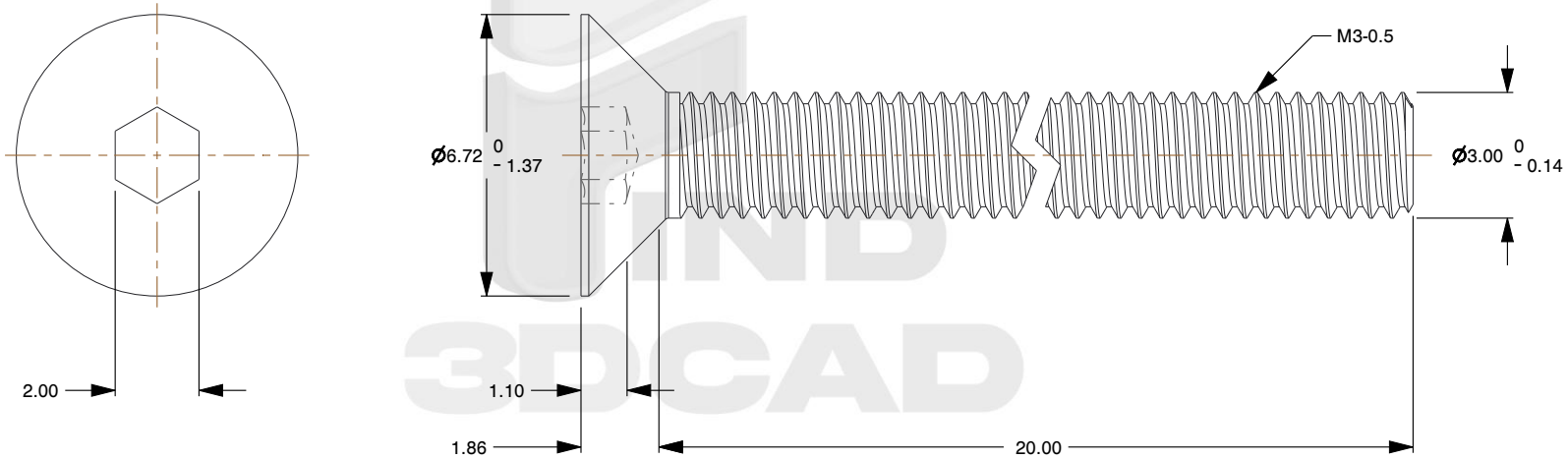

Notes:

1. **Category:** Socket Head Cap Screws
2. **System of Measurement:** Metric
3. **Head Style:** Flat Countersunk Head
4. **Head Style Detail:** 90 Degree Countersink
5. **Drive Style:** Hex Socket Drive
6. **Thread Direction:** Right-Hand Thread
7. **Material:** Steel
8. **Material Grade:** Alloy Steel
9. **Material Processes:** Heat Treated
10. **Coating:** Oxidized
11. **Coating Color:** Black
12. **Origin:** Made in U.S.A.
13. **Standards and Specifications:** ASME B18.3.5M

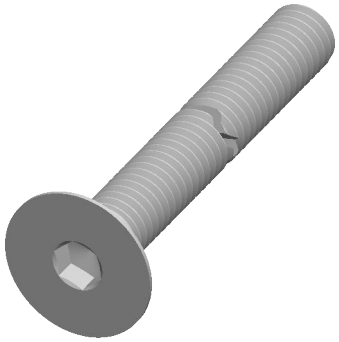

find3dcad

THIRD ANGLE PROJECTION

This file and the related information are provided for reference only and may change without notice. find3dcad does not guarantee the accuracy, completeness, or suitability of this file or the information provided. You are responsible for how you use this file and its information.

This document is the property of find3dcad. The information in it may not be copied, shared, or given to any third party without written permission from find3dcad.

DESCRIPTION

M3-0.5 X 20mm ASME B18.3.5M, Metric, Flat Head Socket Cap Screws, Alloy Steel, Black Oxide, Made in U.S.A.

TITLE

Cap Screws

Sheet Size	PART NUMBER	Rev.	ISSUED
A	MSFHHSCS054-305X20	01	2026-10-20

SCALE: 5.638

Unless otherwise specified Dimensions are in MILLIMETERS