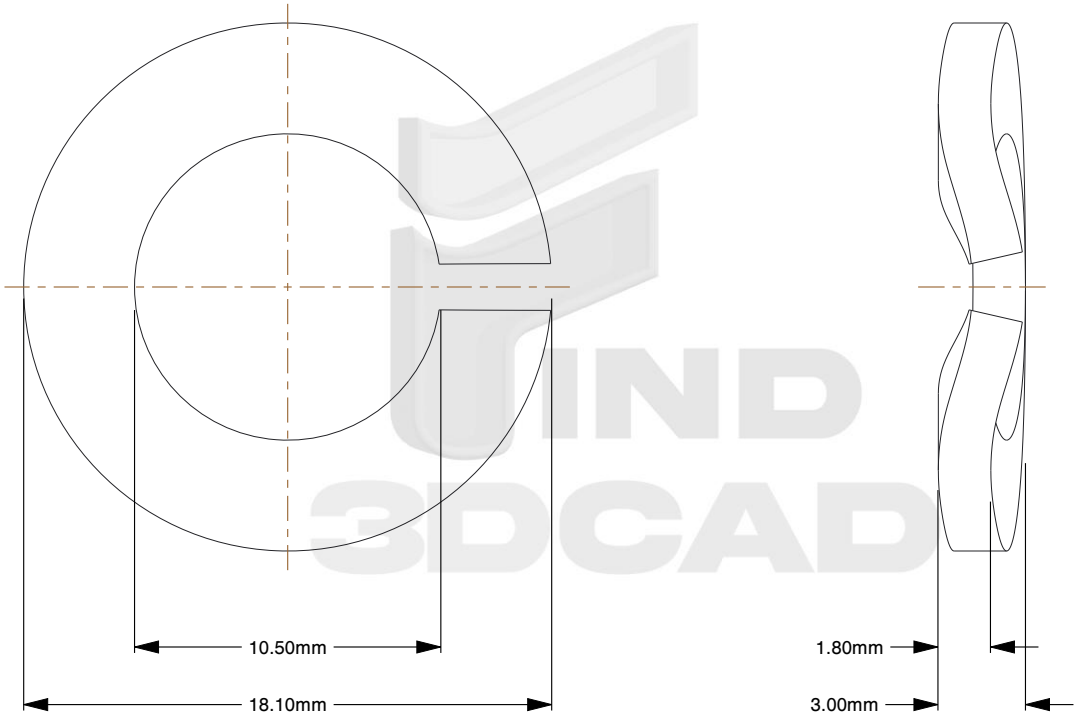




Notes:

1. **For Screw/Bolt Size:** M10
2. **Type:** Split Wave Washer
3. **Form:** Form A
4. **Material:** AISI 303 Stainless Steel
5. **Finish:** Plain
6. **Thickness:** 1.8mm
7. **Inner Diameter:** 10.5mm
8. **Outer Diameter:** 18.1mm
9. **Measurement System:** Metric
10. **Height:** 3mm
11. **Specification:** DIN 128A

find3dcad

THIRD ANGLE PROJECTION

This file and the related information are provided for reference only and may change without notice. find3dcad does not guarantee the accuracy, completeness, or suitability of this file or the information provided. You are responsible for how you use this file and its information.

This document is the property of find3dcad. The information in it may not be copied, shared, or given to any third party without written permission from find3dcad.

| TITLE | DESCRIPTION |
|---|---|
| Split Wave Lock Washer | Split Wave Lock Washer<br>Stainless Steel<br>DIN 128A |

| Sheet Size | PART NUMBER | Rev. | ISSUED |
|---|---|---|---|
| A | MDSWLWA10WAVESS | 01 | 2026-10-19 |

| SCALE: 3.859 | Unless otherwise specified Dimensions are in MILLIMETERS |
|---|---|