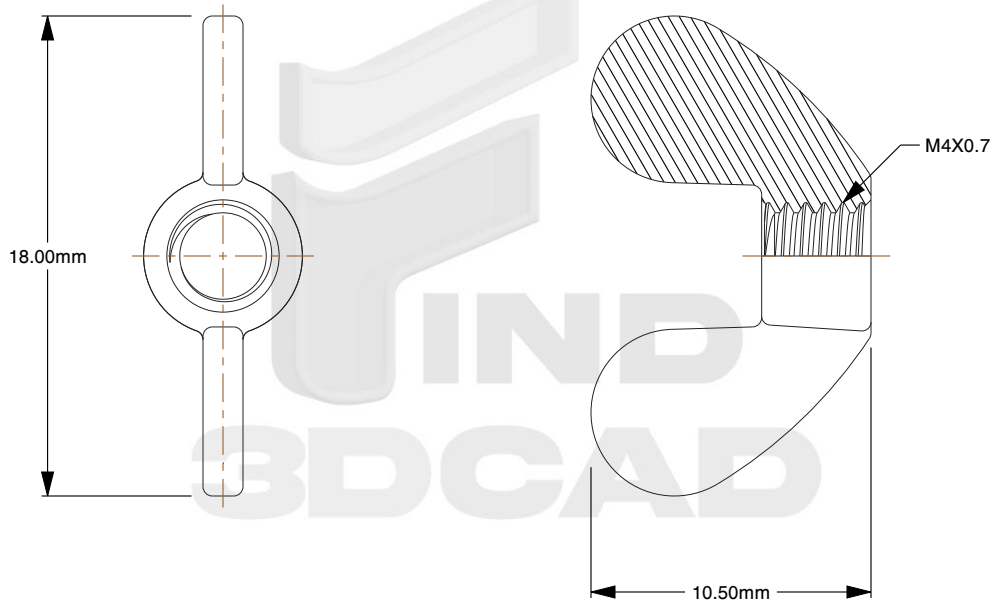


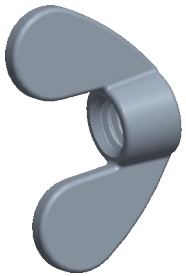

Notes:

1. **Thread Diameter + Pitch:** M4X0.7
2. **Thread Direction:** Right Hand
3. **Type:** Wing Nut
4. **Material:** Steel
5. **Finish:** Zinc Plated
6. **Overall Height:** 10.5mm
7. **Overall Width:** 18mm
8. **Profile:** Normal
9. **Measurement System:** Metric
10. **Specification:** DIN 315 D

find3dcad

THIRD ANGLE PROJECTION

This file and the related information are provided for reference only and may change without notice. find3dcad does not guarantee the accuracy, completeness, or suitability of this file or the information provided. You are responsible for how you use this file and its information.

This document is the property of find3dcad. The information in it may not be copied, shared, or given to any third party without written permission from find3dcad.

| TITLE | DESCRIPTION |
|---|---|
| Wing Nut | Rounded Wing Nut<br>Steel, German<br>DIN 315 |

| Sheet Size | PART NUMBER | Rev. | ISSUED |
|---|---|---|---|
| A | MDRWN4GERCLZ | 01 | 2026-10-16 |

| SCALE: 3.528 | Unless otherwise specified Dimensions are in MILLIMETERS |
|---|---|