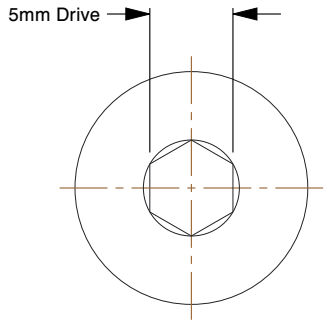

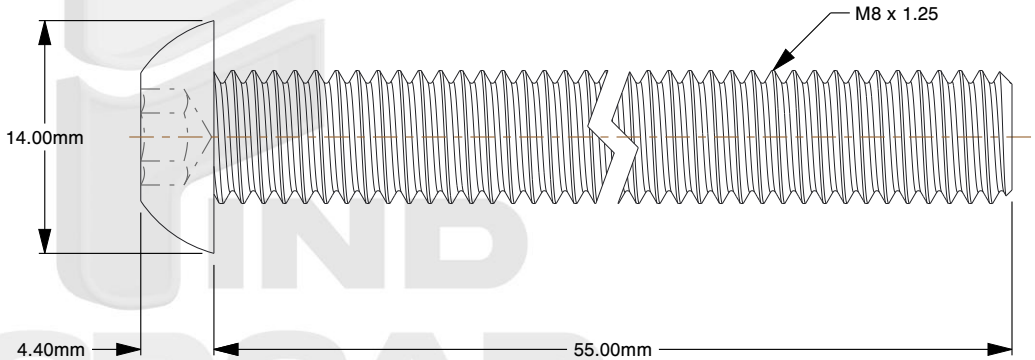

Notes:

1. **Specification:** ISO 7380-1
2. **Thread Diameter + Pitch:** M8X1.25
3. **Length:** 55mm
4. **Thread Amount:** Full Thread
5. **Threaded Length:** 55mm
6. **Unthreaded Length:** 0mm
7. **Material:** A2-70 Stainless Steel
8. **Finish:** Plain
9. **Head Diameter:** 14mm
10. **Head Height:** 4.4mm
11. **Drive:** 5mm Allen Socket
12. **Type Screw/Bolt:** Button Head
13. **Thread Direction:** Right Hand
14. **Measurement System:** Metric

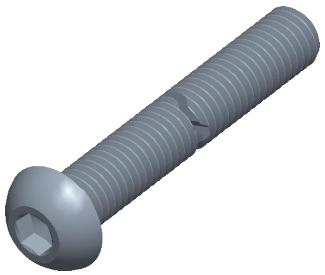

find3dcad

THIRD ANGLE PROJECTION

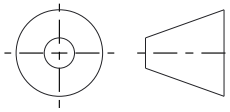

This file and the related information are provided for reference only and may change without notice. find3dcad does not guarantee the accuracy, completeness, or suitability of this file or the information provided. You are responsible for how you use this file and its information.

This document is the property of find3dcad. The information in it may not be copied, shared, or given to any third party without written permission from find3dcad.

TITLE	DESCRIPTION
Button Head	M8 Button Socket Head Stainless Steel A2 ISO 7380-1

Sheet Size	PART NUMBER	Rev.	ISSUED
A	MIHSBHS8X55SS	01	2026-10-19

SCALE: 2.200	Unless otherwise specified Dimensions are in MILLIMETERS