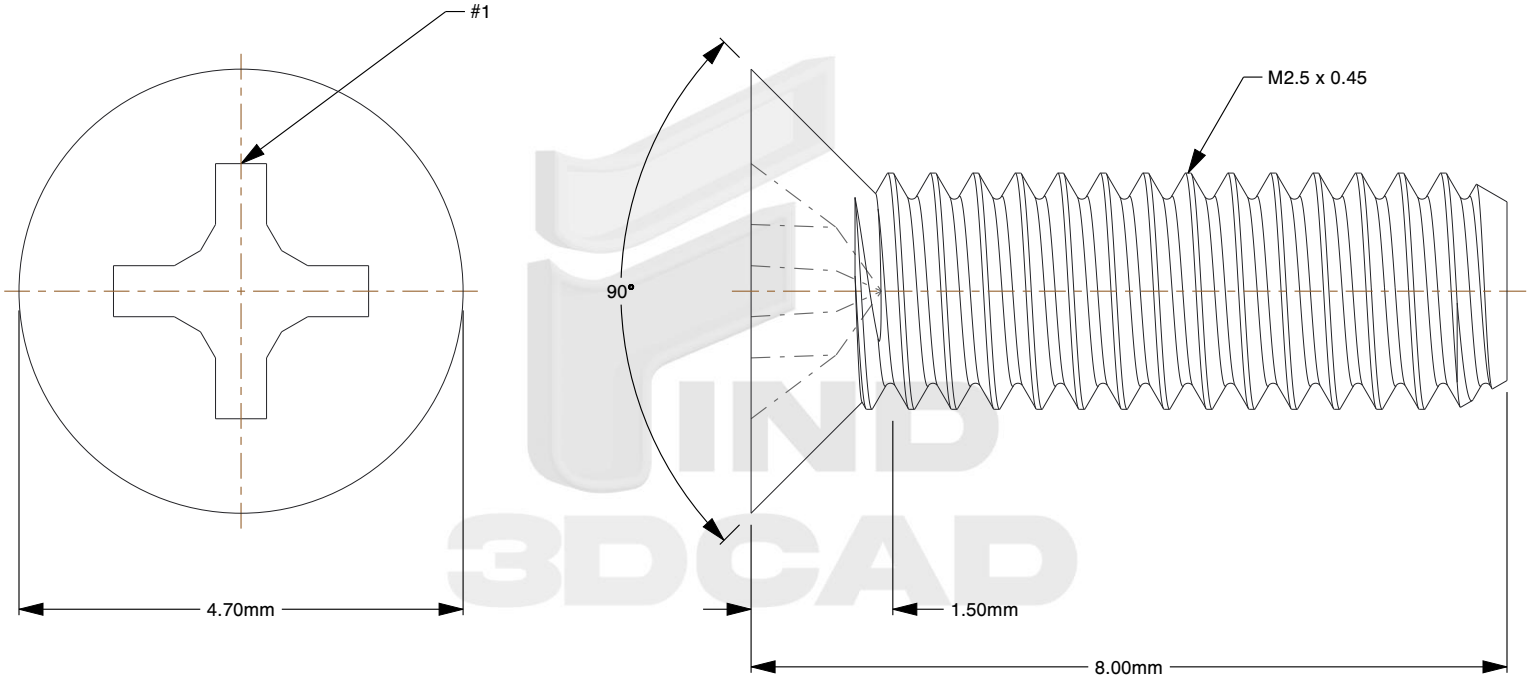

Notes:

1. **Specification:** DIN 965
2. **Thread Diameter + Pitch:** M2.5X0.45
3. **Overall Length:** 8mm
4. **Thread Amount:** Full Thread
5. **Material:** A2-50 Stainless Steel
6. **Finish:** Plain
7. **Head Diameter:** 4.7mm
8. **Head Height:** 1.5mm
9. **Drive:** H1 / Phillips #1
10. **Type Screw/Bolt:** Flat Head Bolt/Screw
11. **Thread Direction:** Right Hand
12. **Measurement System:** Metric
13. **Sulfur (S):** less than or equal to 0.03%

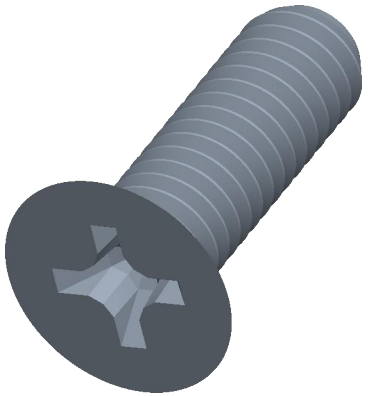

find3dcad

THIRD ANGLE PROJECTION

This file and the related information are provided for reference only and may change without notice. TOREC Screws does not guarantee the accuracy, completeness, or suitability of this file or the information provided. You are responsible for how you use this file and its information.

This document is the property of TOREC Screws. The information in it may not be copied, shared, or given to any third party without written permission from TOREC Screws.

DESCRIPTION

M2.5 Flat Head Phillips
Stainless Steel A2
DIN 965

TITLE

Flat Head Screws

Sheet Size	PART NUMBER	Rev.	ISSUED
A	MDPFSH2-5X8SS	01	2026-10-19

SCALE: 12.500

Unless otherwise specified Dimensions are in MILLIMETERS