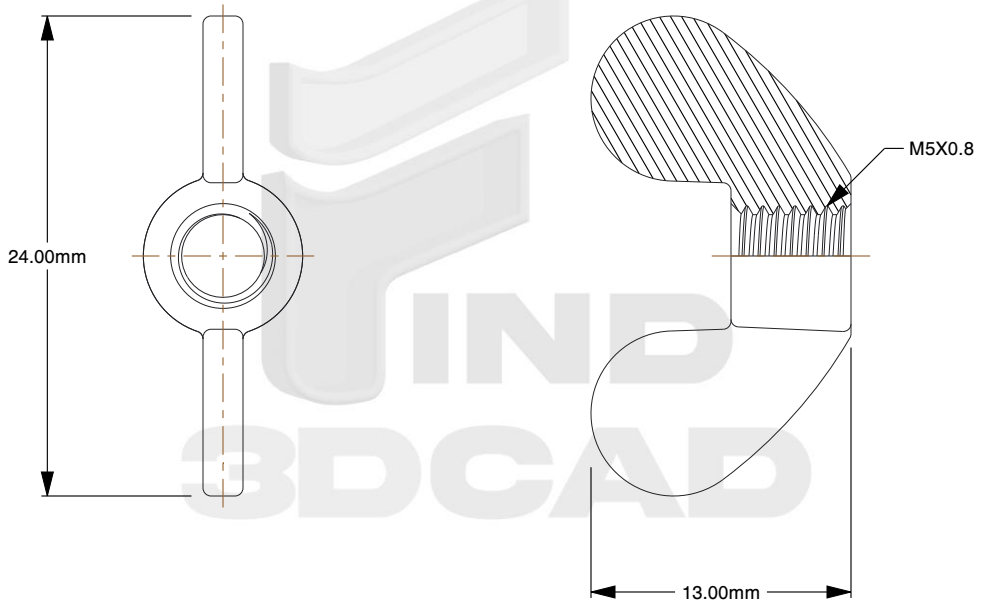

Notes:

1. **Thread Diameter + Pitch:** M5X0.8
2. **Thread Direction:** Right Hand
3. **Type:** Wing Nut
4. **Material:** Brass
5. **Finish:** Plain
6. **Overall Height:** 13mm
7. **Overall Width:** 24mm
8. **Profile:** Normal
9. **Measurement System:** Metric
10. **Specification:** DIN 315 D

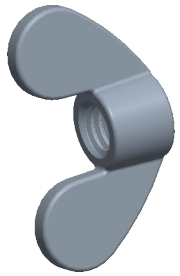

find3dcad

THIRD ANGLE PROJECTION

This file and the related information are provided for reference only and may change without notice. find3dcad does not guarantee the accuracy, completeness, or suitability of this file or the information provided. You are responsible for how you use this file and its information.

This document is the property of find3dcad. The information in it may not be copied, shared, or given to any third party without written permission from find3dcad.

TITLE	DESCRIPTION
Wing Nut	Rounded Wing Nut Brass, German DIN 315

Sheet Size	PART NUMBER	Rev.	ISSUED
A	MDRWN5GERBRS	01	2026-10-19

SCALE: 2.646	Unless otherwise specified Dimensions are in MILLIMETERS