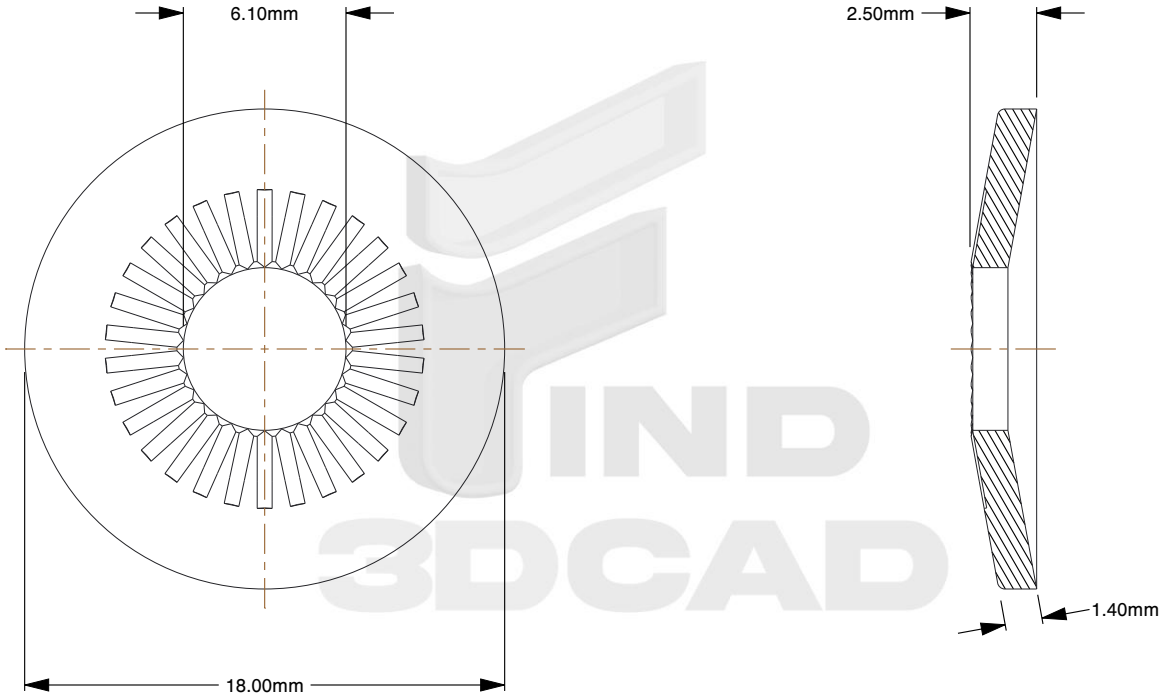

Notes:

1. **for screw/bolt size:** M6
2. **type:** Belleville Washer
3. **washer form:** Form L
4. **material:** Spring Steel
5. **finish:** Mechanical Zinc Plated
6. **thickness:** 1.4mm
7. **inner diameter:** 6.1mm
8. **outer diameter:** 18mm
9. **measurement system:** Metric
10. **washer height:** 2.5mm
11. **specification:** NFE 25-511

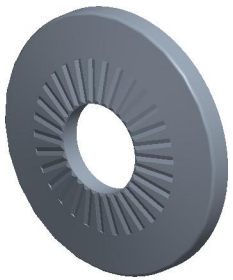

find3dcad

THIRD ANGLE PROJECTION

This file and the related information are provided for reference only and may change without notice. find3dcad does not guarantee the accuracy, completeness, or suitability of this file or the information provided. You are responsible for how you use this file and its information.

This document is the property of find3dcad. The information in it may not be copied, shared, or given to any third party without written permission from find3dcad.

TITLE	DESCRIPTION
Belleville Washer	Steel, Large Series Belleville Washer NFE 25-511 "L"

Sheet Size	PART NUMBER	Rev.	ISSUED
A	MNBWFI6X18MECLZ	01	2026-10-27

SCALE: 3.528	Unless otherwise specified Dimensions are in MILLIMETERS