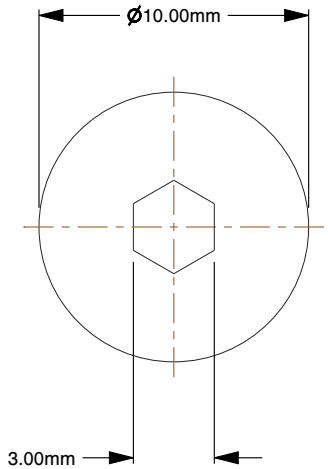

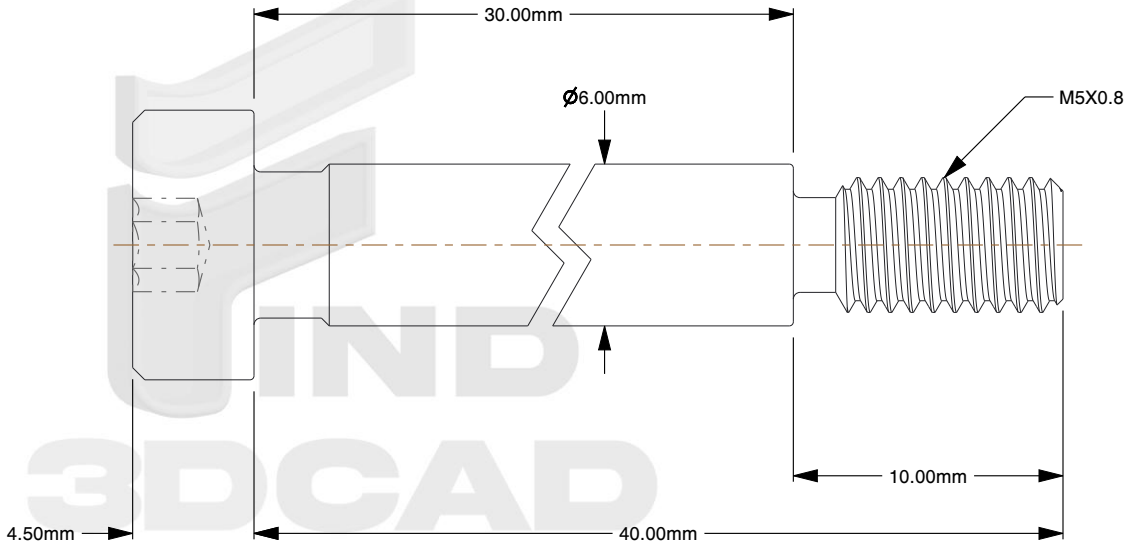

Notes:

1. **Thread Diameter + Pitch:** M5X0.8
2. **Thread Direction:** Right Hand
3. **Type:** Shoulder Bolt
4. **Material:** A2-70 Stainless Steel
5. **Finish:** Plain
6. **Shoulder Length:** 30mm
7. **Shoulder Diameter:** 6mm
8. **Threaded Length:** 10mm
9. **Length Under Head:** 40mm
10. **Head Diameter:** 10mm
11. **Head Height:** 4.5mm
12. **Drive:** 3mm Allen Hex Socket
13. **Specification:** ISO 7379
14. **Measurement System:** Metric

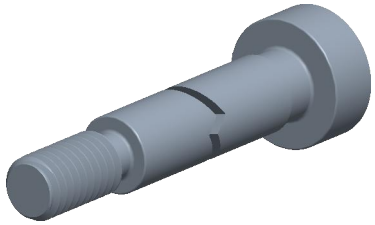

find3dcad

THIRD ANGLE PROJECTION

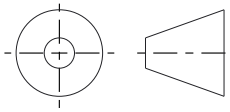

This file and the related information are provided for reference only and may change without notice. find3dcad does not guarantee the accuracy, completeness, or suitability of this file or the information provided. You are responsible for how you use this file and its information.

This document is the property of find3dcad. The information in it may not be copied, shared, or given to any third party without written permission from find3dcad.

TITLE	DESCRIPTION
Shoulder Bolt	M5X0.8, M6 Shoulder Shoulder Bolt Stainless ISO 7379

Sheet Size	PART NUMBER	Rev.	ISSUED
A	MIHSSB5X6X30-40SS	01	2026-10-13

SCALE: 3.567	Unless otherwise specified Dimensions are in MILLIMETERS