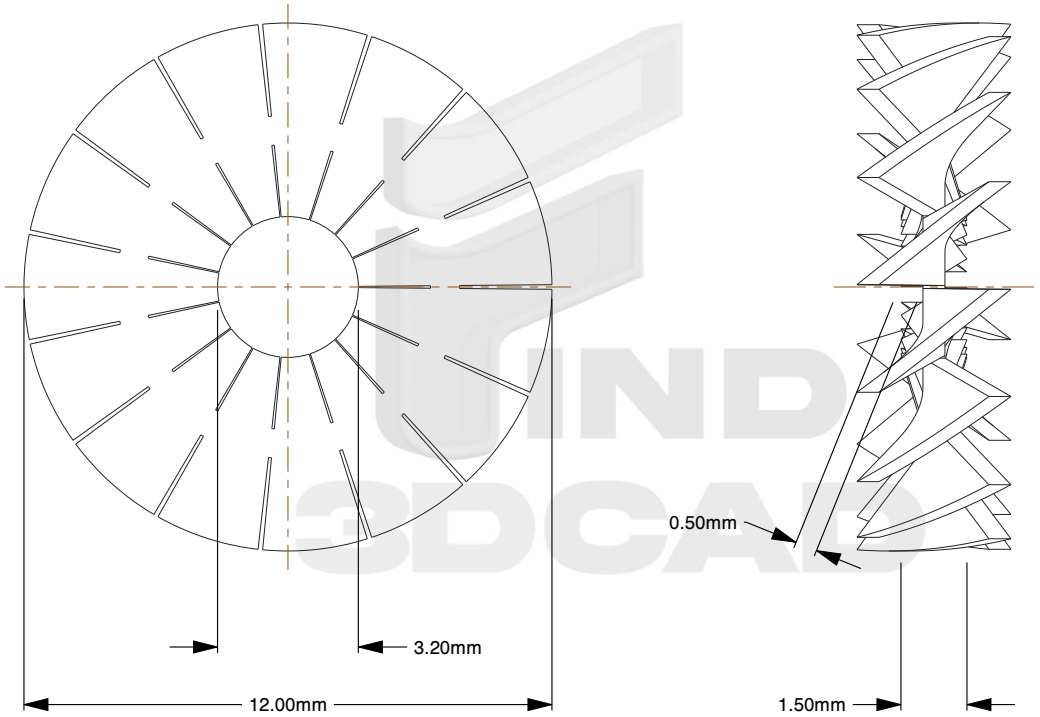

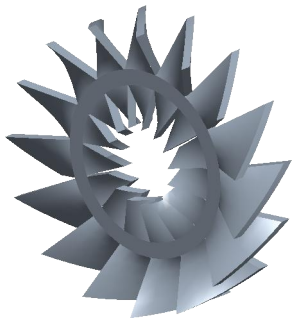

Notes:

1. **For Screw/Bolt Size:** M3
2. **Type:** Star Washer
3. **Form:** Form A/J
4. **Material:** Spring Steel 430-510 HV
5. **Finish:** Zinc Plated
6. **Thickness:** 0.5mm
7. **Inner Diameter:** 3.2mm
8. **Outer Diameter:** 12mm
9. **Measurement System:** Metric
10. **Height:** 1.5mm
11. **Specification:** DIN 6798-A/J

find3dcad

THIRD ANGLE PROJECTION

This file and the related information are provided for reference only and may change without notice. find3dcad does not guarantee the accuracy, completeness, or suitability of this file or the information provided. You are responsible for how you use this file and its information.

This document is the property of find3dcad. The information in it may not be copied, shared, or given to any third party without written permission from find3dcad.

TITLE	DESCRIPTION
Star Washer	Dual Serrations Lock washer Internal + External DIN 6798-A/J Steel, Zinc Plated

Sheet Size	PART NUMBER	Rev.	ISSUED
A	MDSWFAJ3CLZ	01	2026-10-13

SCALE: 5.821	Unless otherwise specified Dimensions are in MILLIMETERS