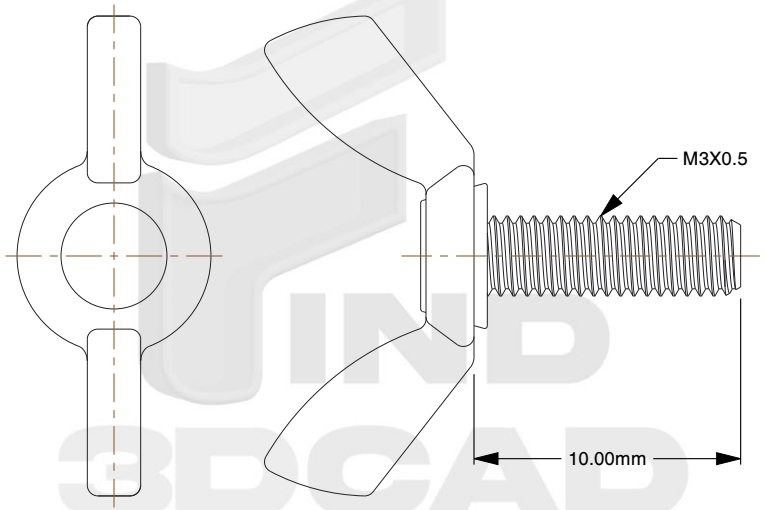

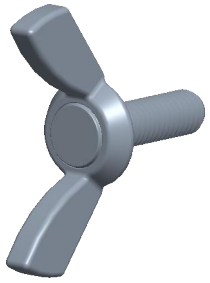

Notes:

1. **Type:** Wing Bolt/Screw
2. **Thread Diameter + Pitch:** M3X0.5
3. **Length:** 10mm
4. **Thread Amount:** Full Thread
5. **Material:** A2 Stainless Steel
6. **Finish:** Plain
7. **Head Diameter:** 18mm
8. **Thread Direction:** Right Hand
9. **Specification:** DIN 316
10. **Measurement System:** Metric

find3dcad

THIRD ANGLE PROJECTION

This file and the related information are provided for reference only and may change without notice. find3dcad does not guarantee the accuracy, completeness, or suitability of this file or the information provided. You are responsible for how you use this file and its information.

This document is the property of find3dcad. The information in it may not be copied, shared, or given to any third party without written permission from find3dcad.

TITLE	DESCRIPTION
Wing Bolts	M3X0.5 Wing Bolt American Straight Wing A2 Stainless Steel

Sheet Size	PART NUMBER	Rev.	ISSUED
A	MDASWB3X10AMERSS	01	2026-10-13

SCALE: 3.528	Unless otherwise specified Dimensions are in MILLIMETERS