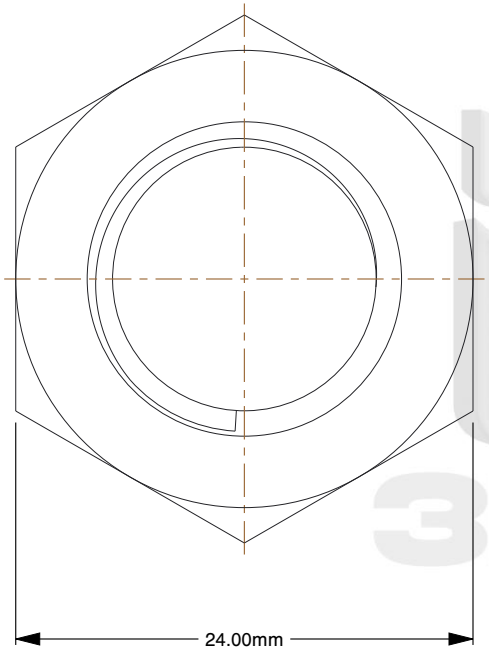

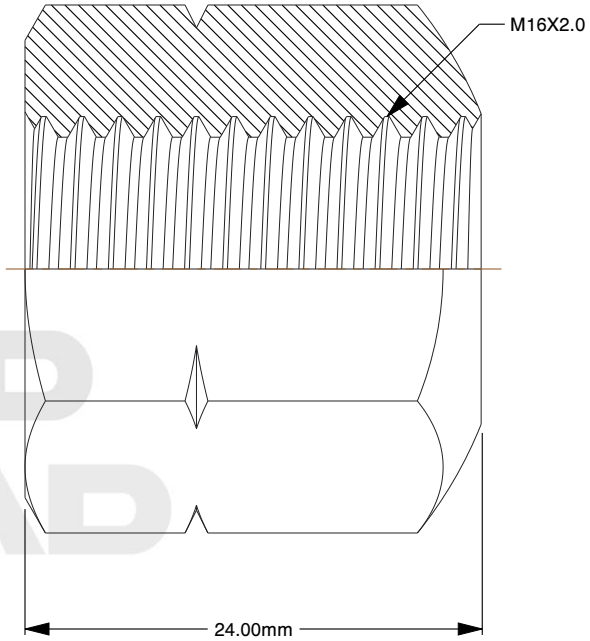

Notes:

1. **Thread Diameter + Pitch:** M16X2.0
2. **Thread Direction:** Right Hand
3. **Type:** Tall Fixture Nut
4. **Material:** Class 10 Steel
5. **Finish:** Black Oxide
6. **Drive:** 24mm Wrench
7. **Height:** 24mm
8. **Profile:** Tall
9. **Measurement System:** Metric
10. **Specification:** DIN 6330

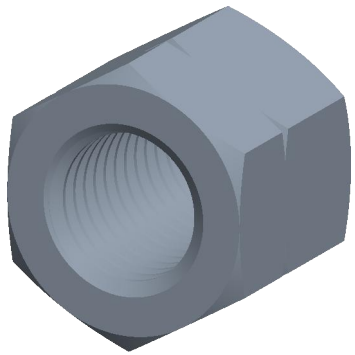

find3dcad

THIRD ANGLE PROJECTION

This file and the related information are provided for reference only and may change without notice. find3dcad does not guarantee the accuracy, completeness, or suitability of this file or the information provided. You are responsible for how you use this file and its information.

This document is the property of find3dcad. The information in it may not be copied, shared, or given to any third party without written permission from find3dcad.

TITLE	DESCRIPTION
Tall Fixture Nut	Tall Fixture Hex Nut Steel Class 10 DIN 6330

Sheet Size	PART NUMBER	Rev.	ISSUED
A	MDTFN16BLK	01	2026-10-19

SCALE: 2.520	Unless otherwise specified Dimensions are in MILLIMETERS