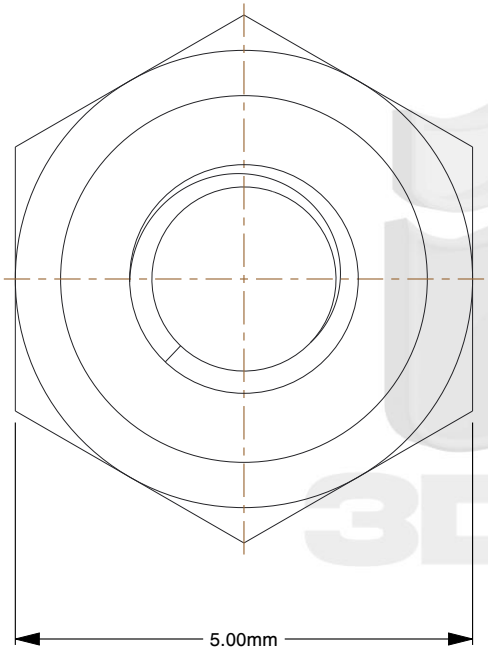

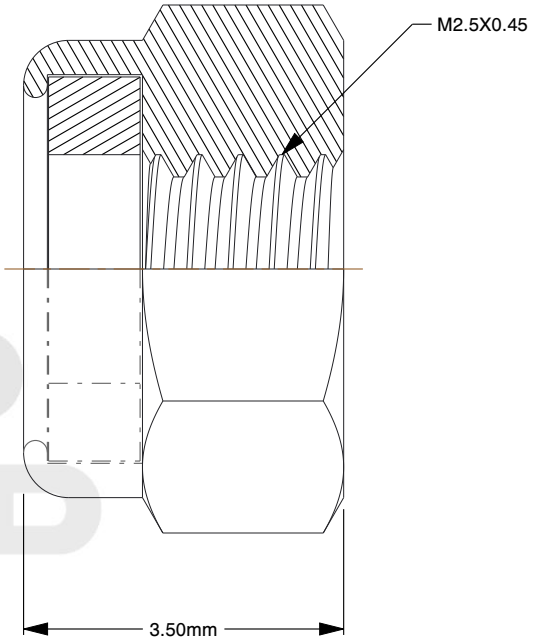

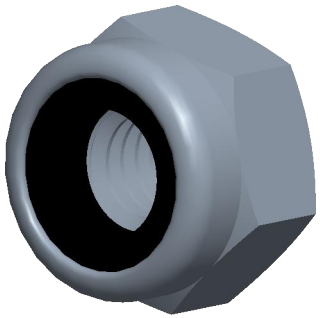

Notes:

1. **Thread Diameter + Pitch:** M2.5X0.45
2. **Thread Direction:** Right Hand
3. **Type:** Nylon Locking Nut
4. **Material:** Class 8 Steel
5. **Finish:** Yellow Zinc Plated
6. **Drive:** 5mm Wrench
7. **Height:** 3.5mm
8. **Measurement System:** Metric
9. **Specification:** DIN 985

find3dcad

THIRD ANGLE PROJECTION

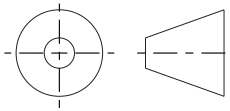

This file and the related information are provided for reference only and may change without notice. find3dcad does not guarantee the accuracy, completeness, or suitability of this file or the information provided. You are responsible for how you use this file and its information.

This document is the property of find3dcad. The information in it may not be copied, shared, or given to any third party without written permission from find3dcad.

TITLE	DESCRIPTION
Nylon Locking Nut	Coarse DIN 985 Nylon Lock Nut Steel Class 8 Finishes Vary

Sheet Size	PART NUMBER	Rev.	ISSUED
A	MDTNLN2-5YLW	01	2026-10-16

SCALE: 12.098	Unless otherwise specified Dimensions are in MILLIMETERS