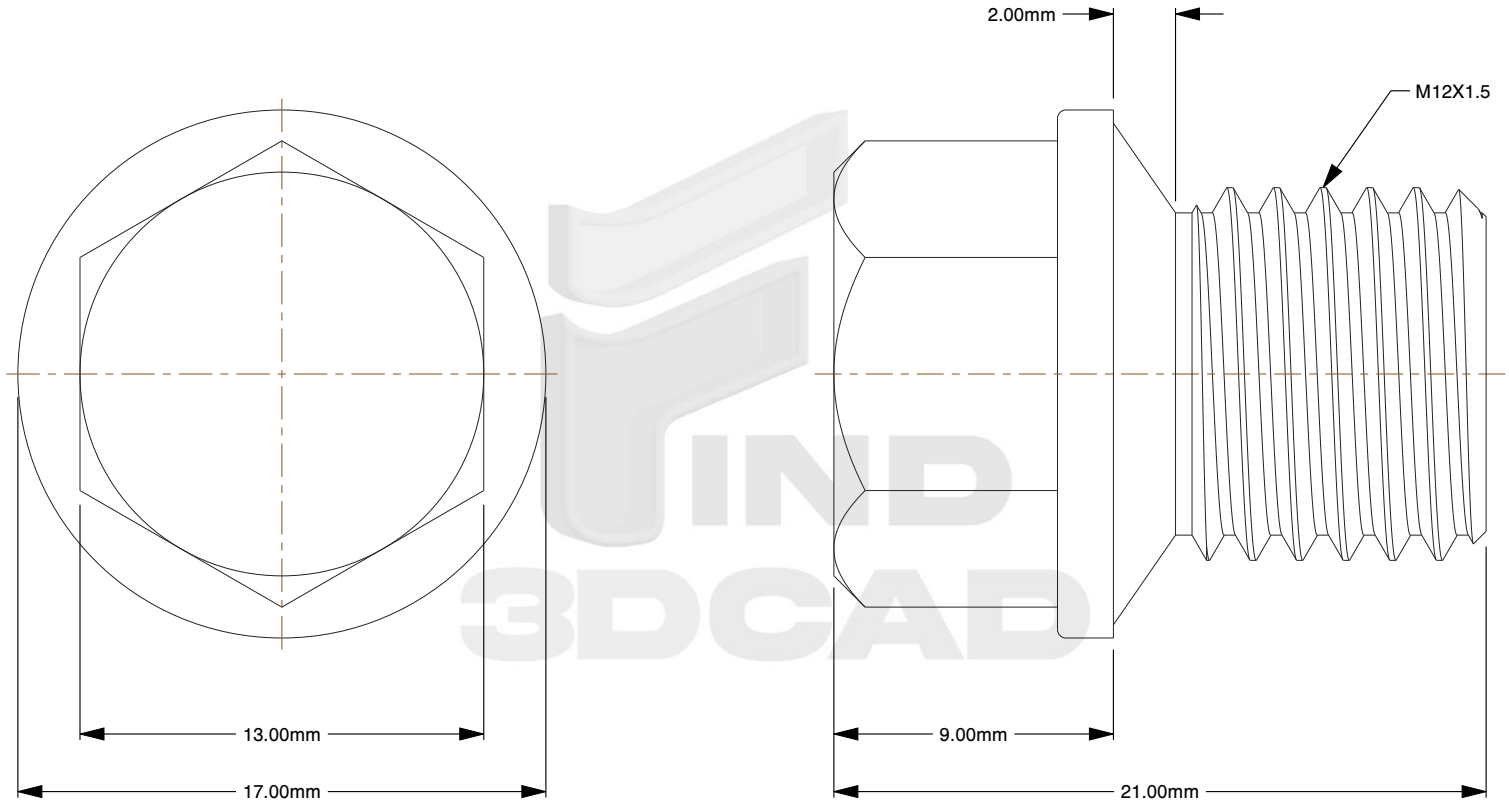

Notes:

1. **Thread Diameter + Pitch:** M12X1.5
2. **Thread Direction:** Right Hand
3. **Type:** External Hex Drain Plug
4. **Material:** A2-50 Stainless Steel
5. **Finish:** Plain
6. **Type DP Thread:** Straight
7. **Overall Length:** 21mm
8. **Drive:** 13mm Wrench
9. **Head Height:** 9mm
10. **Flange Type:** Smooth
11. **Flange Width:** 17mm
12. **Taper Seat Height:** 2mm
13. **Specification:** DIN 910

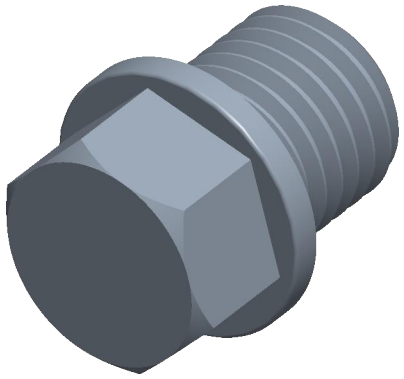

find3dcad

THIRD ANGLE PROJECTION

This file and the related information are provided for reference only and may change without notice. find3dcad does not guarantee the accuracy, completeness, or suitability of this file or the information provided. You are responsible for how you use this file and its information.

This document is the property of find3dcad. The information in it may not be copied, shared, or given to any third party without written permission from find3dcad.

TITLE	DESCRIPTION
External Hex Drain Plug	Flanged Hex Drive Plug Stainless Steel DIN 910

Sheet Size	PART NUMBER	Rev.	ISSUED
A	MDFHDP12X1-5HSS	01	2026-10-13

SCALE: 4.109	Unless otherwise specified Dimensions are in MILLIMETERS