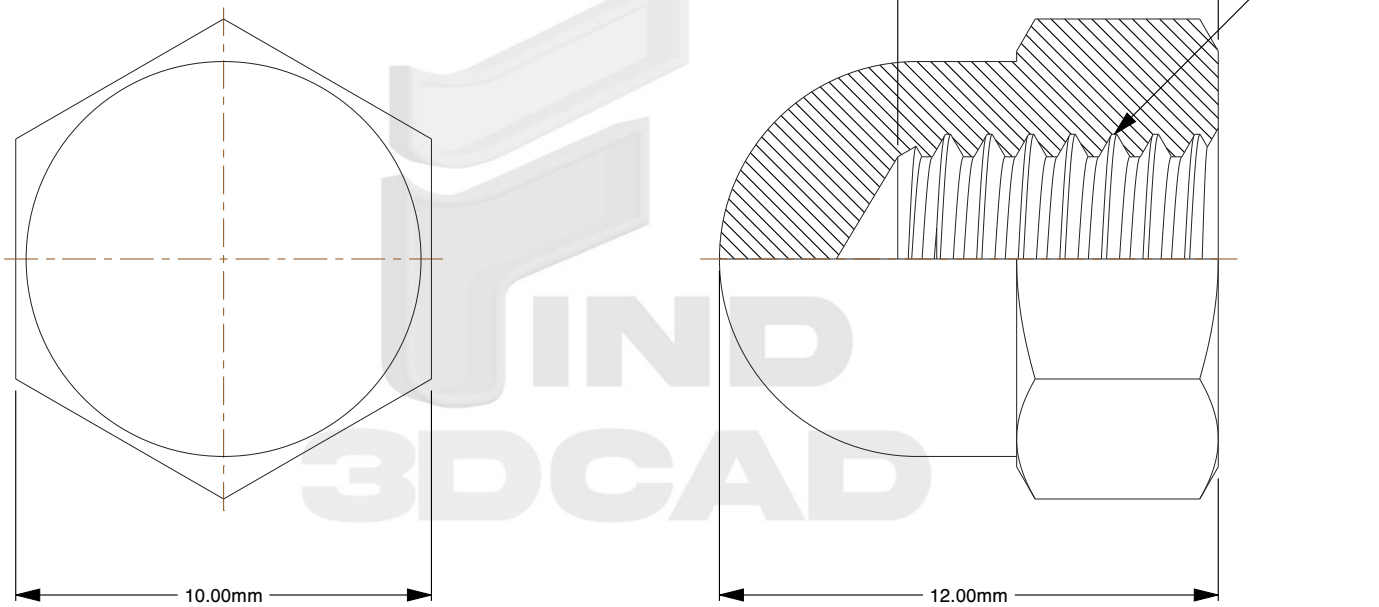


Notes:

1. **Thread Diameter + Pitch:** M6X1.0
2. **Thread Direction:** Right Hand
3. **Type:** Acorn Nut
4. **Material:** A2 Stainless Steel
5. **Finish:** Black Oxide
6. **Drive:** 10mm Wrench
7. **Internal Thread Depth:** 7.71mm
8. **Height:** 12mm
9. **Profile:** Normal
10. **Measurement System:** Metric
11. **Specification:** DIN 1587

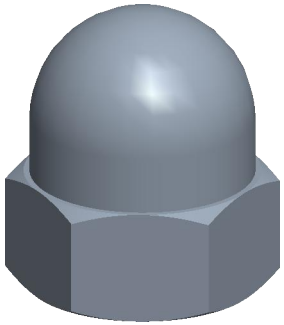

find3dcad

THIRD ANGLE PROJECTION

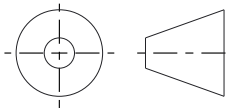

This file and the related information are provided for reference only and may change without notice. find3dcad does not guarantee the accuracy, completeness, or suitability of this file or the information provided. You are responsible for how you use this file and its information.

This document is the property of find3dcad. The information in it may not be copied, shared, or given to any third party without written permission from find3dcad.

| TITLE | DESCRIPTION |
|---|---|
| Acorn Nut | Acorn Nut, Coarse<br>Stainless + Black Oxide<br>DIN 1587 |

| Sheet Size | PART NUMBER | Rev. | ISSUED |
|---|---|---|---|
| A | MDAN6BLKSS | 01 | 2026-10-19 |

| SCALE: 5.499 | Unless otherwise specified Dimensions are in MILLIMETERS |
|---|---|