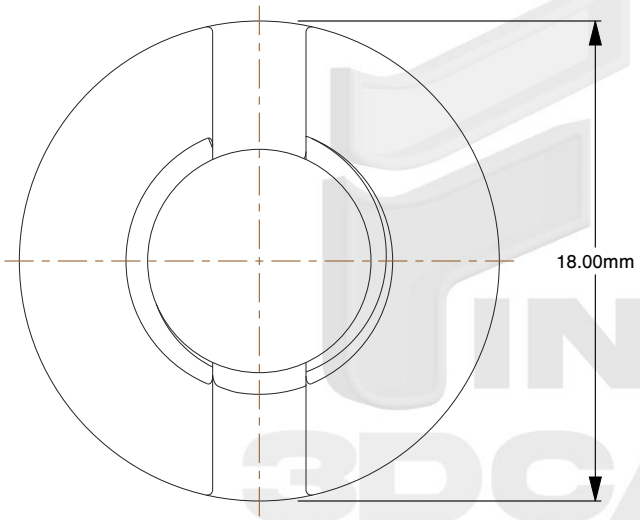

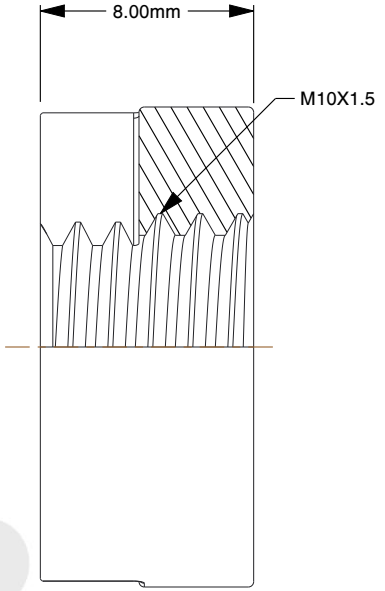

Notes:

1. **Thread Diameter + Pitch:** M10X1.5
2. **Thread Direction:** Right Hand
3. **Type:** Slotted Round Nut
4. **Material:** A1-50 Stainless Steel
5. **Finish:** Plain
6. **Drive:** Slotted
7. **Profile:** Low
8. **Height:** 8mm
9. **Outer Diameter:** 18mm
10. **Measurement System:** Metric
11. **Specification:** DIN 546

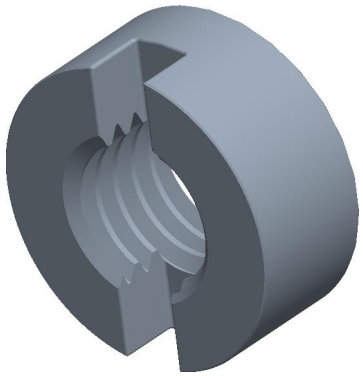

find3dcad

THIRD ANGLE PROJECTION

This file and the related information are provided for reference only and may change without notice. find3dcad does not guarantee the accuracy, completeness, or suitability of this file or the information provided. You are responsible for how you use this file and its information.

This document is the property of find3dcad. The information in it may not be copied, shared, or given to any third party without written permission from find3dcad.

TITLE	DESCRIPTION
Round Nuts	Slotted Round Nut Stainless Steel DIN 546

Sheet Size	PART NUMBER	Rev.	ISSUED
A	MDSRN10SS	01	2026-10-16

SCALE: 3.528	Unless otherwise specified Dimensions are in MILLIMETERS