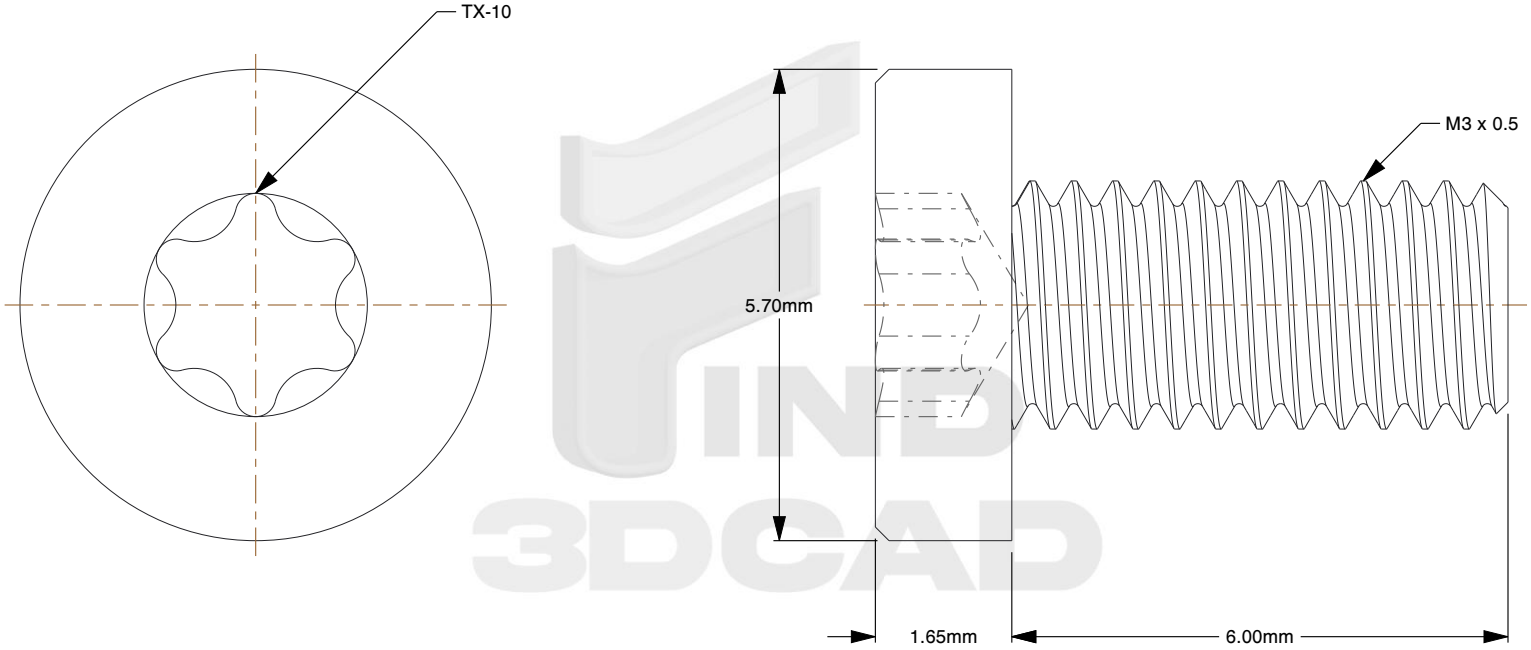

Notes:

1. **Specification:** ISO 7380-1 TX
2. **Thread Diameter + Pitch:** M3X0.5
3. **Length:** 6mm
4. **Thread Amount:** Full Thread
5. **Threaded Length:** 6mm
6. **Unthreaded Length:** 0mm
7. **Material:** A2-50 Stainless Steel
8. **Finish:** Black Oxide
9. **Head Diameter:** 5.7mm
10. **Head Height:** 1.65mm
11. **Drive:** T10 Torx Socket
12. **Type Screw/Bolt:** Button Head
13. **Thread Direction:** Right Hand
14. **Measurement System:** Metric

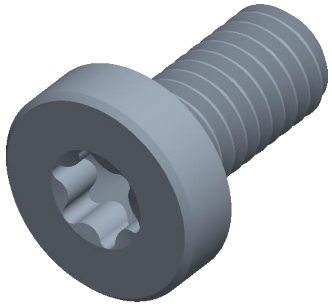

find3dcad

THIRD ANGLE PROJECTION

This file and the related information are provided for reference only and may change without notice. find3dcad does not guarantee the accuracy, completeness, or suitability of this file or the information provided. You are responsible for how you use this file and its information.

This document is the property of find3dcad. The information in it may not be copied, shared, or given to any third party without written permission from find3dcad.

TITLE	DESCRIPTION
Button Head Screws	M3 Torx Button Head Stainless + Black Oxide ISO 7380-1 TX

Sheet Size	PART NUMBER	Rev.	ISSUED
A	MITBHS3X6TXBLKSS	01	2026-10-16

SCALE: 10.940

Unless otherwise specified Dimensions are in MILLIMETERS