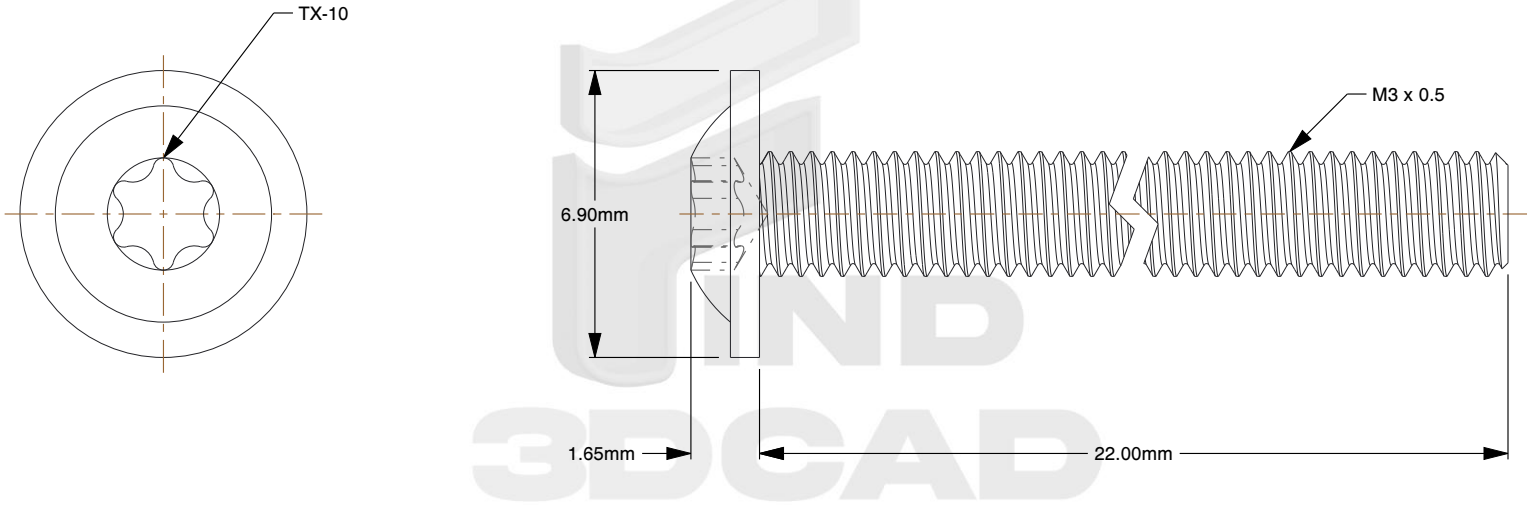

Notes:

1. **Specification:** ISO 7380-2 TX
2. **Thread Diameter + Pitch:** M3X0.5
3. **Length:** 22mm
4. **Thread Amount:** Full Thread
5. **Threaded Length:** 22mm
6. **Unthreaded Length:** 0mm
7. **Material:** A2-50 Stainless Steel
8. **Finish:** Plain
9. **Flange Type:** Smooth
10. **Flange Width:** 6.9mm
11. **Head Height:** 1.65mm
12. **Drive:** T10 Torx Socket
13. **Type Screw/Bolt:** Button Flange Head
14. **Thread Direction:** Right Hand
15. **Measurement System:** Metric

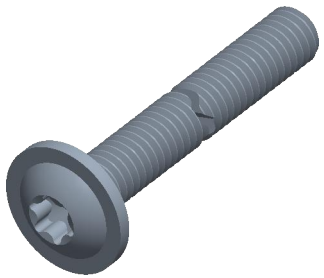

find3dcad

THIRD ANGLE PROJECTION

This file and the related information are provided for reference only and may change without notice. find3dcad does not guarantee the accuracy, completeness, or suitability of this file or the information provided. You are responsible for how you use this file and its information.

This document is the property of find3dcad. The information in it may not be copied, shared, or given to any third party without written permission from find3dcad.

TITLE	DESCRIPTION
Button Head Flange Screws	M3 Torx Button Flange Stainless Steel A2 ISO 7380-2 TX

Sheet Size	PART NUMBER	Rev.	ISSUED
A	MITBHFS3X22SS	01	2026-10-16

SCALE: 5.501	Unless otherwise specified Dimensions are in MILLIMETERS