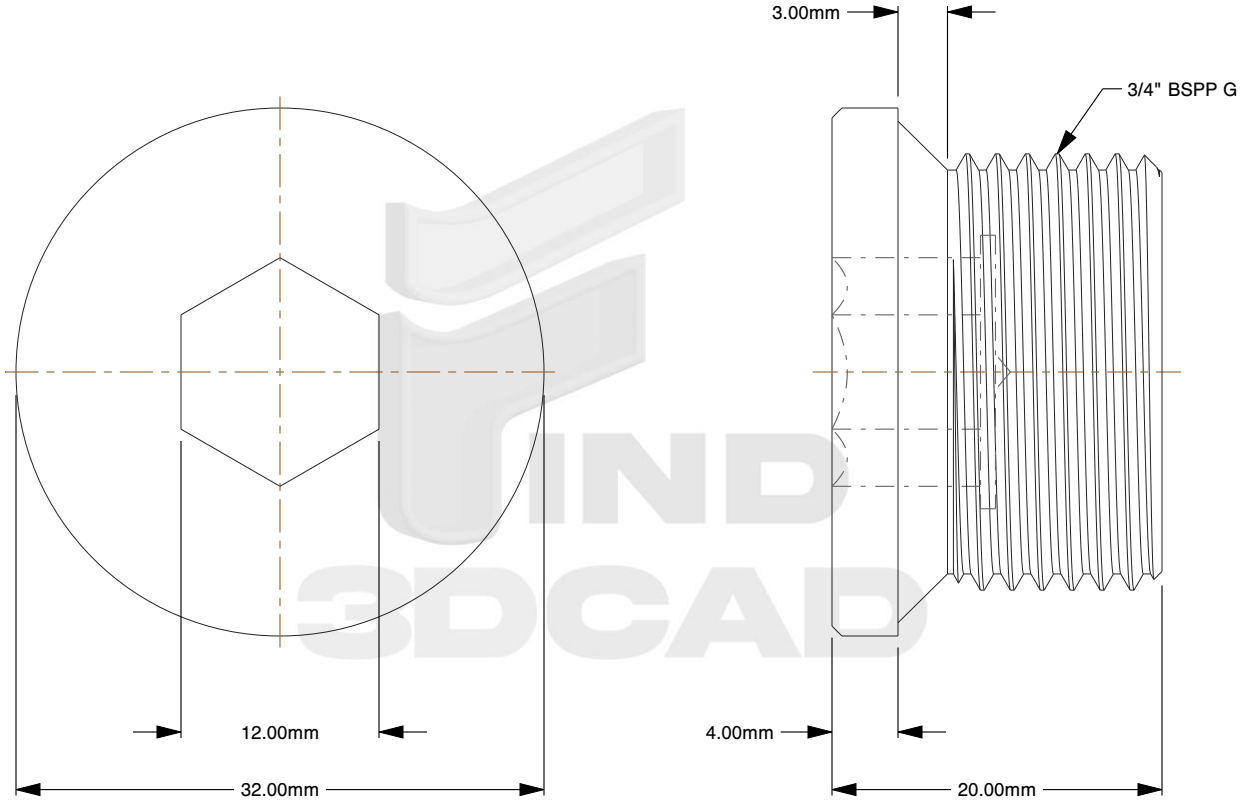


Notes:

1. **Thread Diameter + Pitch:** 3/4" BSPP G
2. **Thread Direction:** Right Hand
3. **Type:** Allen Socket Drain Plug
4. **Material:** A2-50 Stainless Steel
5. **Finish:** Plain
6. **Type DP Thread:** BSPP Parallel
7. **Overall Length:** 20mm
8. **Drive:** 12mm Allen Socket
9. **Head Height:** 4mm
10. **Flange Type:** Smooth
11. **Flange Width:** 32mm
12. **Taper Seat Height:** 3mm
13. **Specification:** DIN 908 BSPP

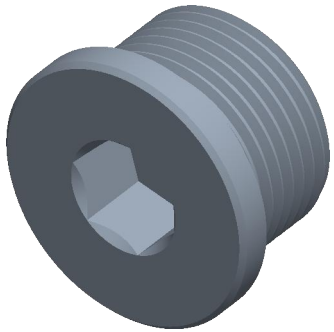

find3dcad

THIRD ANGLE PROJECTION

This file and the related information are provided for reference only and may change without notice. find3dcad does not guarantee the accuracy, completeness, or suitability of this file or the information provided. You are responsible for how you use this file and its information.

This document is the property of find3dcad. The information in it may not be copied, shared, or given to any third party without written permission from find3dcad.

| TITLE | DESCRIPTION |
|---|---|
| Allen Socket Drain Plug | British Flanged Allen Plug<br>Stainless Steel<br>DIN 908 BSPP |

| Sheet Size | PART NUMBER | Rev. | ISSUED |
|---|---|---|---|
| A | MDASDPB3-4AHSS | 01 | 2026-10-16 |

| SCALE: 2.183 | Unless otherwise specified Dimensions are in MILLIMETERS |
|---|---|