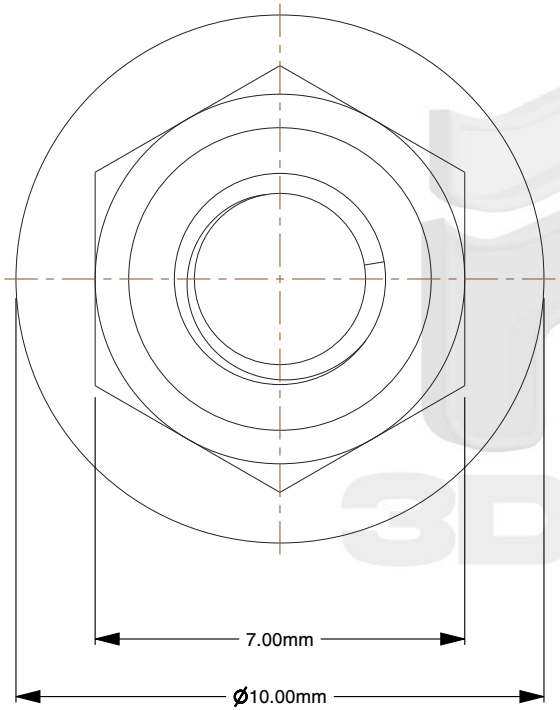

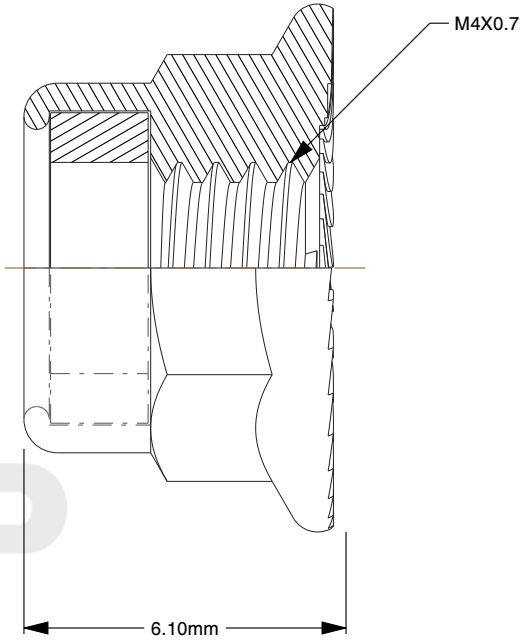

Notes:

1. **Thread Diameter + Pitch:** M4X0.7
2. **Thread Direction:** Right Hand
3. **Type:** Nylon Flange Nut
4. **Material:** A2-50 Stainless Steel
5. **Finish:** Black Oxide
6. **Drive:** 7mm Wrench
7. **Height:** 6.1mm
8. **Flange Width:** 10mm
9. **Flange Type:** Serrated
10. **Measurement System:** Metric
11. **Specification:** DIN 6926

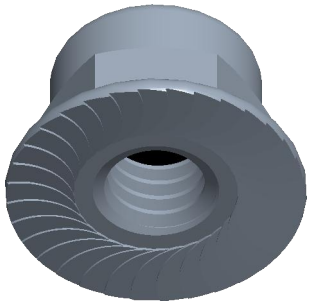

find3dcad

THIRD ANGLE PROJECTION

This file and the related information are provided for reference only and may change without notice. find3dcad does not guarantee the accuracy, completeness, or suitability of this file or the information provided. You are responsible for how you use this file and its information.

This document is the property of find3dcad. The information in it may not be copied, shared, or given to any third party without written permission from find3dcad.

TITLE	DESCRIPTION
Flange Nuts	Coarse DIN 6926 Nylon Flange Stainless + Black Oxide Serrated Bottom Nut

Sheet Size	PART NUMBER	Rev.	ISSUED
A	MDSNFL4SRBLKSS	01	2026-10-20

SCALE: 6.985	Unless otherwise specified Dimensions are in MILLIMETERS