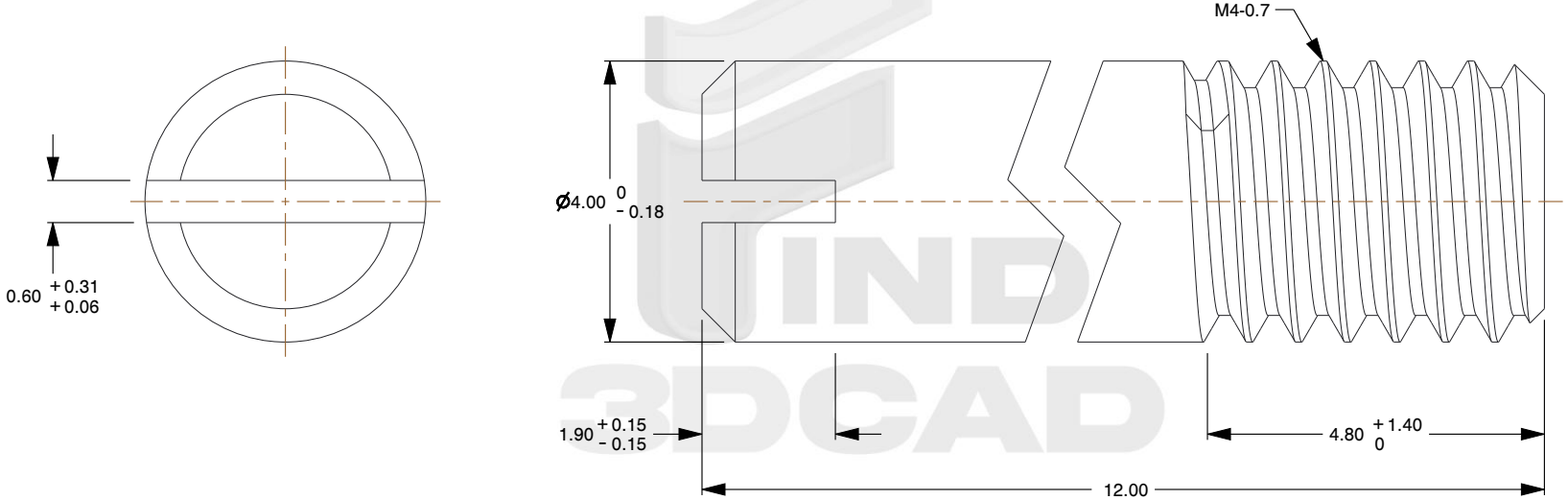

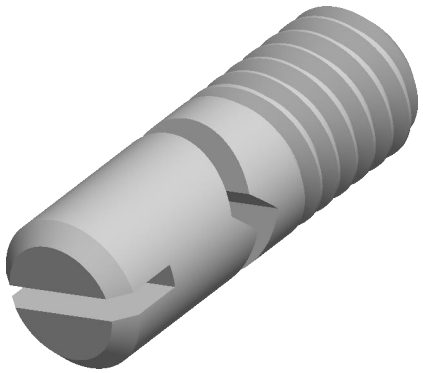

Notes:

1. **Category:** Set Screws
2. **System of Measurement:** Metric
3. **Head Style:** Headless
4. **Drive Style:** Slotted Drive
5. **Thread Length:** Part Thread
6. **Thread Direction:** Right-Hand Thread
7. **Material:** Stainless Steel
8. **Material Grade:** AISI 303 Stainless Steel
9. **Coating:** Uncoated
10. **Origin:** Origin Undefined
11. **Standards and Specifications:** DIN 427 / ISO 2342

find3dcad

THIRD ANGLE PROJECTION

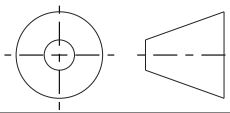

This file and the related information are provided for reference only and may change without notice. find3dcad does not guarantee the accuracy, completeness, or suitability of this file or the information provided. You are responsible for how you use this file and its information.

This document is the property of find3dcad. The information in it may not be copied, shared, or given to any third party without written permission from find3dcad.

DESCRIPTION

M4-0.7 X 12mm DIN 427 / ISO 2342, Metric, Set Screws, Slotted Drive, Part Thread, AISI 33 Stainless Steel (18-8)

TITLE

Set Screws

Sheet Size	PART NUMBER	Rev.	ISSUED
A	MDSSSP515-407X12	01	2026-10-20

SCALE: 9.684

Unless otherwise specified Dimensions are in MILLIMETERS