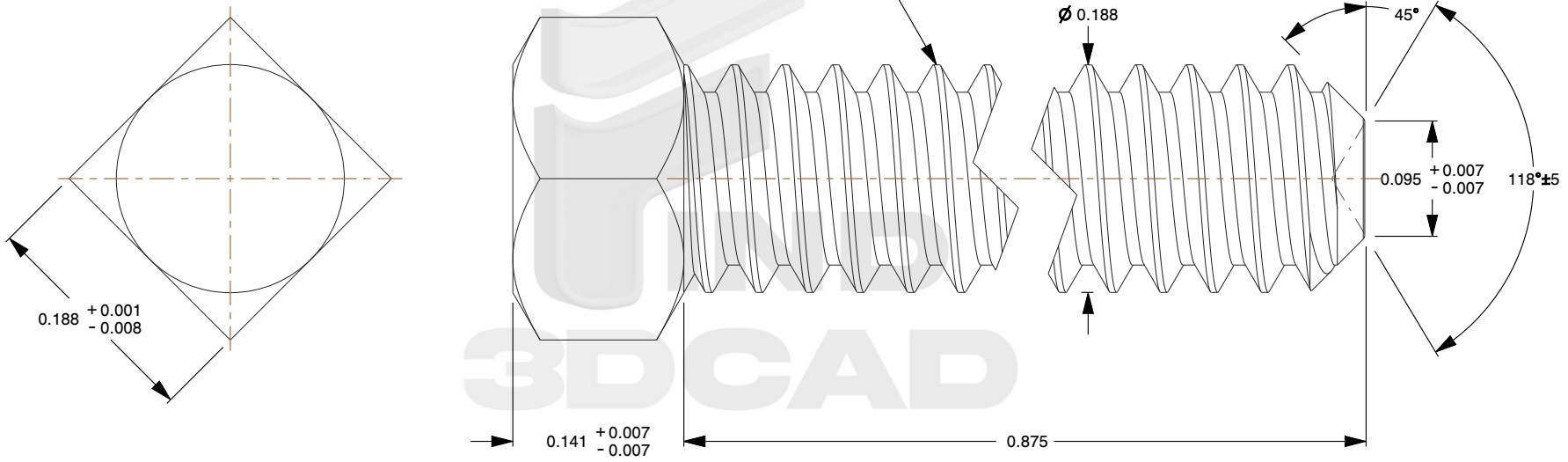

Notes:

1. **Category:** Set Screws
2. **System of Measurement:** Inch
3. **Head Style:** Square Head
4. **Drive Style:** External Square Drive
5. **Pitch:** Coarse Thread
6. **Thread Length:** Full Thread
7. **Thread Direction:** Right-Hand Thread
8. **Point:** Cup Point
9. **Material:** Steel
10. **Material Grade:** Low Carbon Steel
11. **Material Processes:** Case Hardened
12. **Coating:** Uncoated
13. **Origin:** Origin Undefined
14. **Standards and Specifications:** ASME B18.6.2

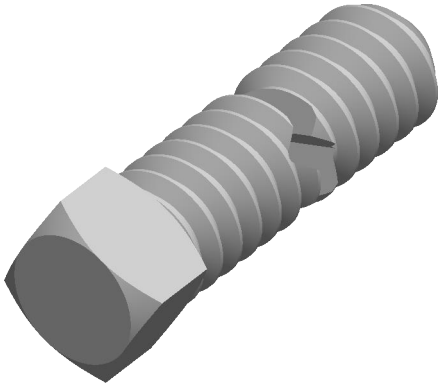

find3dcad

THIRD ANGLE PROJECTION

This file and the related information are provided for reference only and may change without notice. find3dcad does not guarantee the accuracy, completeness, or suitability of this file or the information provided. You are responsible for how you use this file and its information.

This document is the property of find3dcad. The information in it may not be copied, shared, or given to any third party without written permission from find3dcad.

TITLE	DESCRIPTION
Set Screw	#10-24 X 7/8" Set Screws, Square Head, Cup Point, Full Thread, Steel

Sheet Size	PART NUMBER	Rev.	ISSUED
A	ISCESSS036-1024X78	01	2026-10-12

SCALE: 7.183

Unless otherwise specified Dimensions are in INCHES