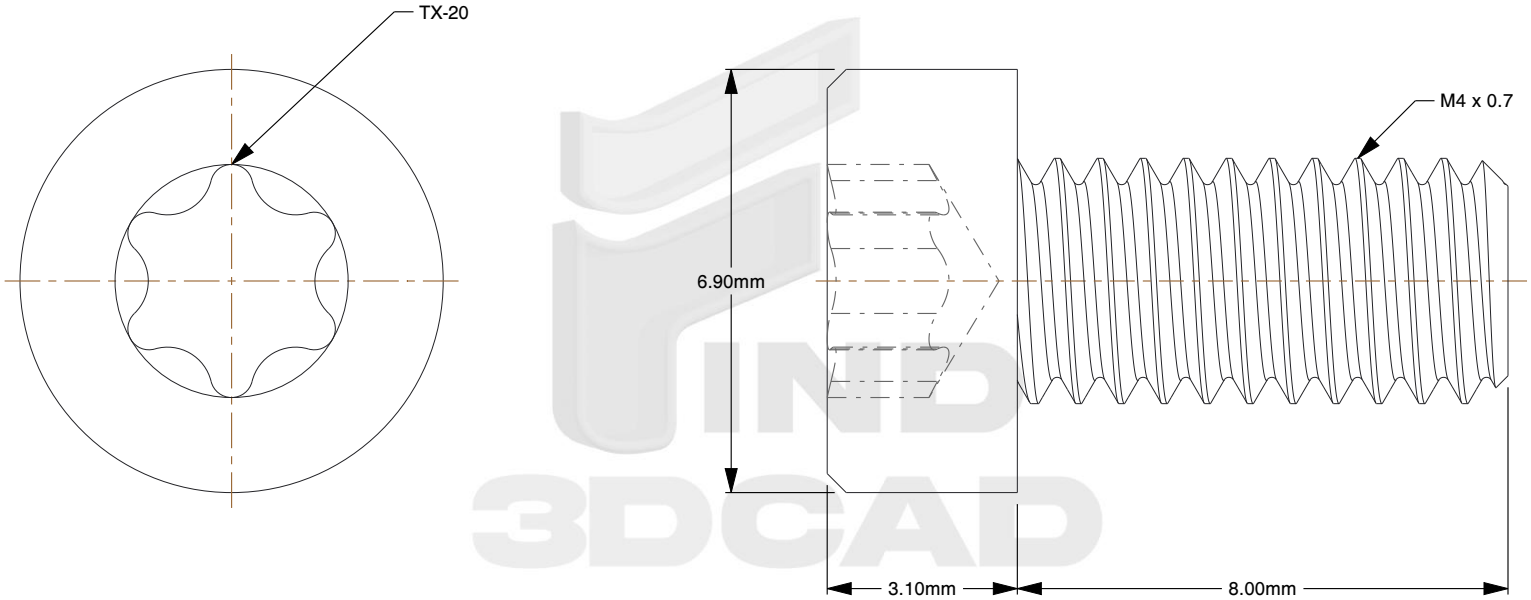

Notes:

1. **Specification:** ISO 14580
2. **Thread Diameter + Pitch:** M4X0.7
3. **Length:** 8mm
4. **Thread Amount:** Full Thread
5. **Threaded Length:** 8mm
6. **Unthreaded Length:** 0mm
7. **Material:** A2-50 Stainless Steel
8. **Finish:** Plain
9. **Head Diameter:** 6.9mm
10. **Head Height:** 3.1mm
11. **Drive:** T20 Torx Socket
12. **Type Screw/Bolt:** Socket Low Head
13. **Thread Direction:** Right Hand
14. **Measurement System:** Metric

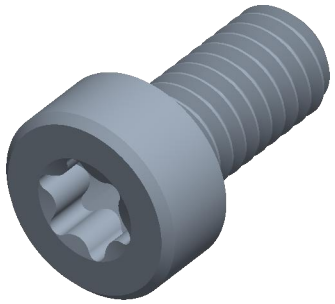

find3dcad

THIRD ANGLE PROJECTION

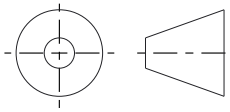

This file and the related information are provided for reference only and may change without notice. find3dcad does not guarantee the accuracy, completeness, or suitability of this file or the information provided. You are responsible for how you use this file and its information.

This document is the property of find3dcad. The information in it may not be copied, shared, or given to any third party without written permission from find3dcad.

TITLE	DESCRIPTION
Low Socket Head Screws	M4 Low Torx Socket Stainless Steel A2 ISO 14580

Sheet Size	PART NUMBER	Rev.	ISSUED
A	MILTSHS4X8TXLOWSS	01	2026-10-16

SCALE: 8.114	Unless otherwise specified Dimensions are in MILLIMETERS