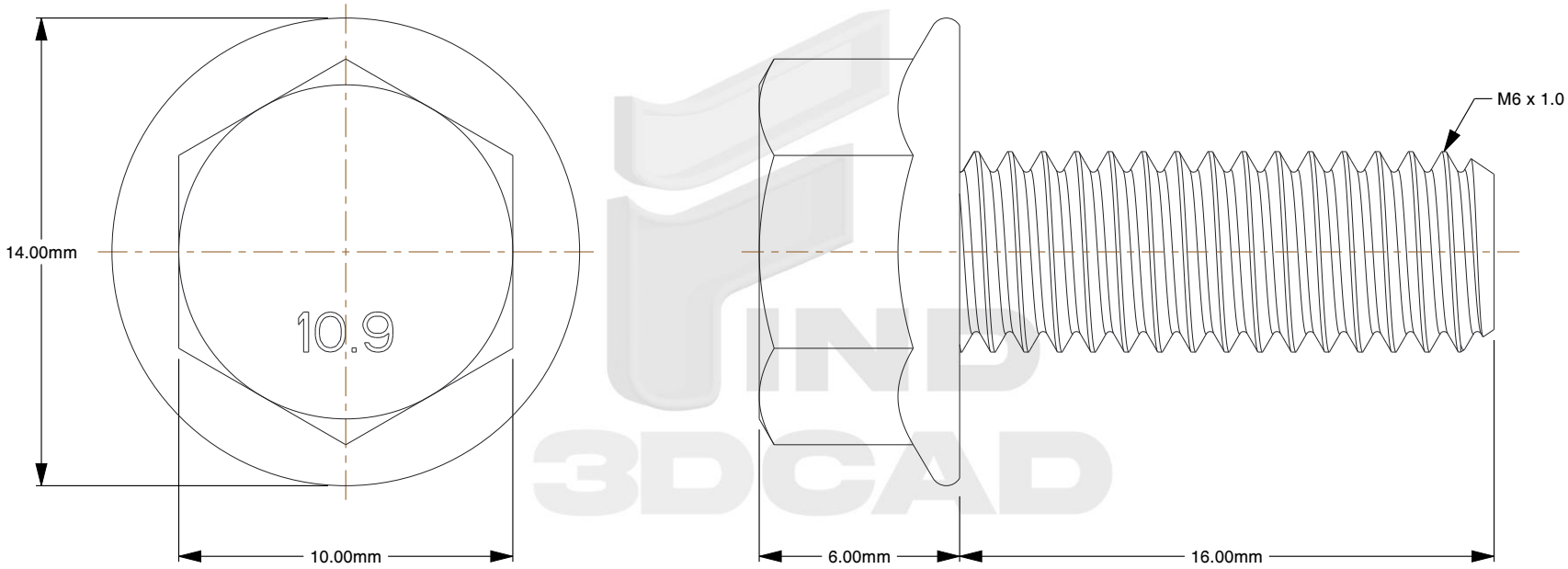

Notes:

1. **Specification:** JIS B1189
2. **Thread Diameter + Pitch:** M6X1.0
3. **Length:** 16mm
4. **Thread Amount:** Full Thread
5. **Threaded Length:** 16mm
6. **Unthreaded Length:** 0mm
7. **Material:** Class 10.9 Steel
8. **Finish:** Zinc Plated
9. **Flange Type:** Smooth
10. **Flange Width:** 14mm
11. **Head Height:** 6mm
12. **Drive:** 10mm Wrench
13. **Type Screw/Bolt:** Hex Flange Head
14. **Thread Direction:** Right Hand
15. **Measurement System:** Metric

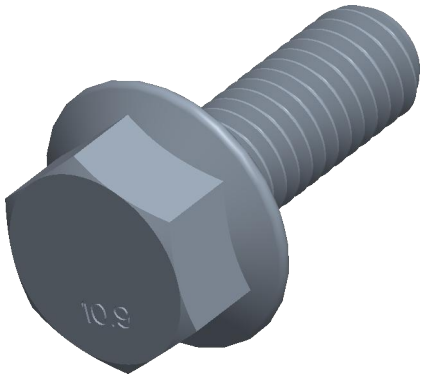

THIRD ANGLE PROJECTION

This file and the related information are provided for reference only and may change without notice. find3dcad does not guarantee the accuracy, completeness, or suitability of this file or the information provided. You are responsible for how you use this file and its information.

This document is the property of find3dcad. The information in it may not be copied, shared, or given to any third party without written permission from find3dcad.

TITLE	PART NUMBER
Hex Head Flange Bolts	MJHHFB6X16CLZ

PART NUMBER	DESCRIPTION
MJHHFB6X16CLZ	M6 JIS Flange Bolt Steel Class 10.9 Zinc JIS B-1189 / 10mm Wrench

Sheet Size	Design Code	Drawing No.	Rev.	ISSUED
A	001	10001	01	2026-10-16

SCALE: 4.808	Unless otherwise specified Dimensions are in INCHES