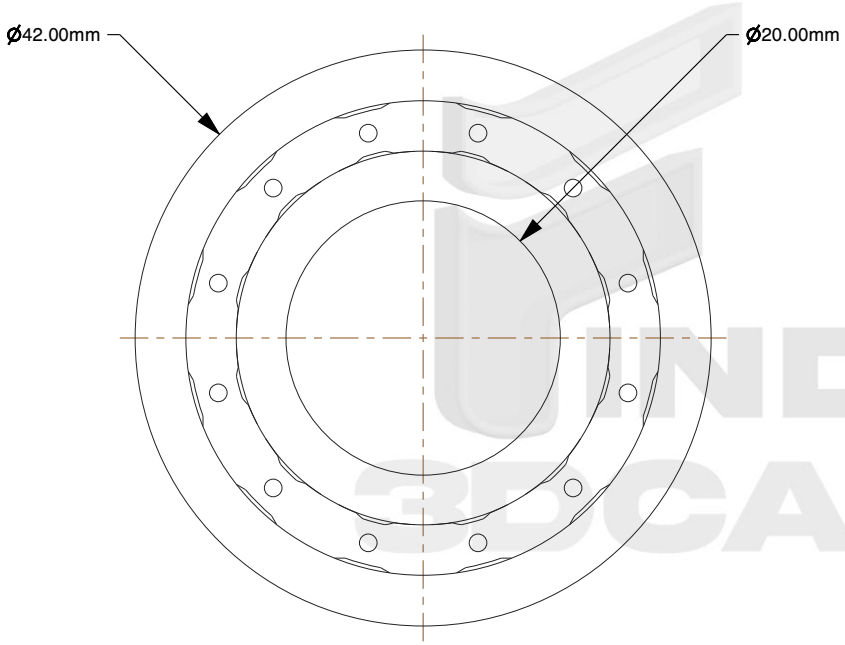

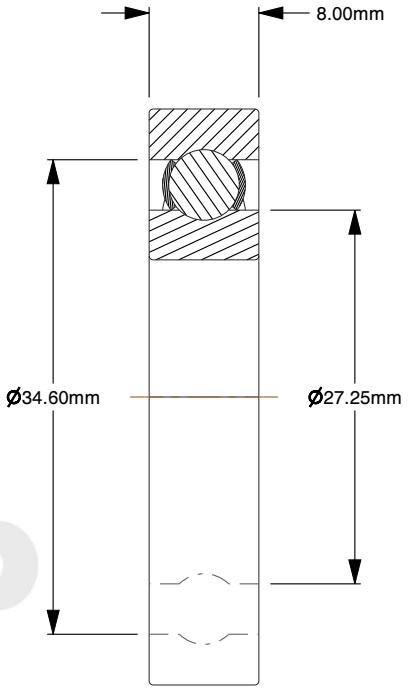

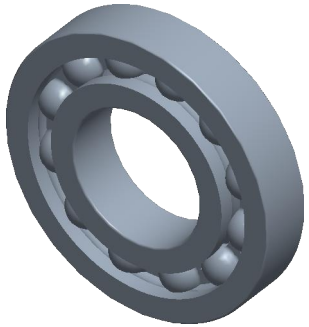

Notes:

1. **Bearing Type:** Deep groove ball bearing
2. **Bore type:** Cylindrical
3. **Sealing:** Without
4. **Number of rows:** 1
5. **Filling slots:** Without
6. **Bore diameter:** 20mm
7. **Outside diameter:** 42mm
8. **Width:** 8mm

Sheet steel reinforced contact seal of acrylonitrile-butadiene rubber (NBR) on one side of the bearing

find3dcad

THIRD ANGLE PROJECTION

This file and the related information are provided for reference only and may change without notice. find3dcad does not guarantee the accuracy, completeness, or suitability of this file or the information provided. You are responsible for how you use this file and its information.

This document is the property of find3dcad. The information in it may not be copied, shared, or given to any third party without written permission from find3dcad.

DESCRIPTION

Deep groove ball bearing

TITLE

Ball Bearing

Sheet Size	PART NUMBER	Rev.	ISSUED
A	16004	01	2026-10-16

SCALE: 1.814

Unless otherwise specified Dimensions are in MILLIMETERS